SHERLE WAGNER INTERNATIONAL

SOLID GLAZED PROVENCE CERAMIC KNOB FAUCET SET 1097BSN821-04XX-XX
HAND PAINTED PROVENCE CERAMIC KNOB FAUCET SET 1097BSN821-XXXX-XX-XX

1097BSN821-04SD-GP

PRODUCT FEATURES

- Available in all Sherle Wagner International finishes
- Solid brass/bronze construction
- 1.0 gpm (3.8 L/min) flow rate
- Includes (2) 1/2″ washerless 1/4 turn ceramic valves
- Includes (2) flexible hoses 1/2″ FIP x 1/2″ FIP x 12″ length
- Includes gaskets and tee fitting
- Includes lift rod and self sealing pop-up assembly
- Recommended 12″ spread. Can be installed 8″-16″
- Available with various Hand Painted Ceramic

AVAILABLE METAL FINISHES

PN Polished Nickel
CP Polished Chrome
BN Brushed Nickel
BC Brushed Chrome
SB Satin Brass
OB Oil Rubbed Brass
PB Polished Brass
FP Flemish Patina
EP English Patina
VA Verdi Antique
GP Gold Plate
AL Almond Gold
ES English Silver
BS Butler Silver
RG Rose Gold
AP Antique Pewter
PE Black Pearl
BG Burnished Gold
AG Antique Gold
SP Satin Platinum
HP High Polished Platinum
BP Burnished Platinum

AVAILABLE PLAIN CERAMIC INSERTS

04WH WHITE
04SD SAND

AVAILABLE CERAMIC- HAND PAINTED INSERTS

111P Peaches
74GL Garlands & Leaves
24GP Gold Accents
24PL Platinum Accents

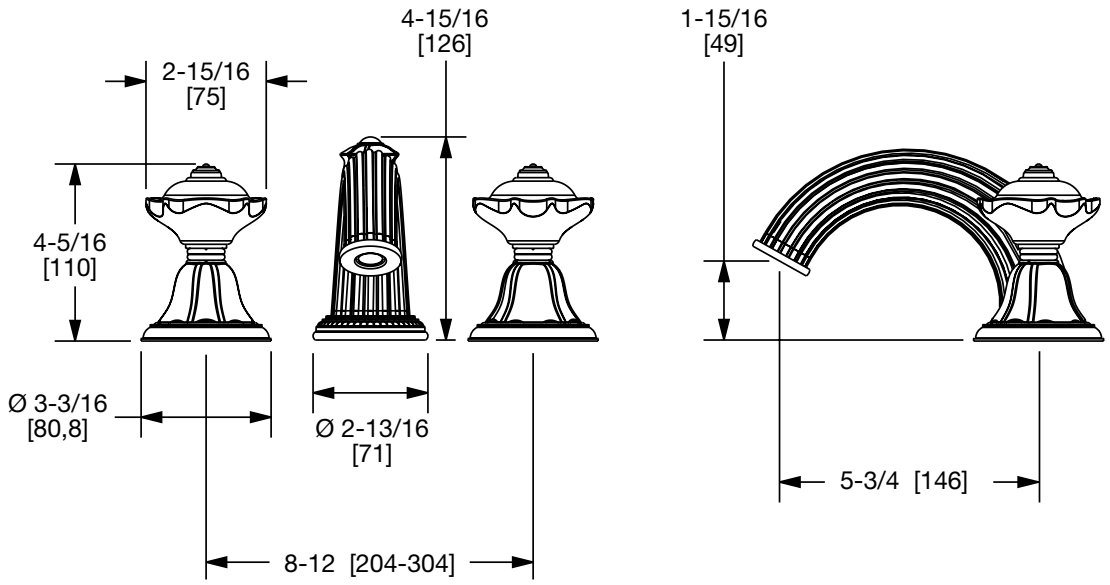

The measurements shown are for reference only. Products and specifications shown are subject to change without notice.

Rev A