SHERLE WAGNER INTERNATIONAL

ONYX EMPIRE LEVER FAUCET SET 0914BSN819-XXXX-XX

0914BSN819-HNOX-GP

PRODUCT FEATURES

- Available in all Sherle Wagner International finishes
- Solid brass/bronze construction
- 1.0 gpm (3.8 L/min) flow rate
- Includes (2) 1/2″ washerless 1/4 turn ceramic valves
- Includes (2) flexible hoses 1/2″ FIP x 1/2″ FIP x 12″ length
- Includes gaskets and tee fitting
- Includes lift rod and self sealing pop-up assembly
- Recommended 12″ spread. Can be installed 8″-16″
- Refer to stone chart for standard stone insert, contact sales associate for custom stone options

AVAILABLE METAL FINISHES

PN Polished Nickel
CP Polished Chrome
BN Brushed Nickel
BC Brushed Chrome
SB Satin Brass
OB Oil Rubbed Brass
PB Polished Brass
FP Flemish Patina
EP English Patina
VA Verdi Antique
GP Gold Plate
AL Almond Gold
ES English Silver
BS Butler Silver
RG Rose Gold
AP Antique Pewter
PE Black Pearl
BG Burnished Gold
AG Antique Gold
SP Satin Platinum
HP High Polished Platinum
BP Burnished Platinum

AVAILABLE ONYX INSERTS

BROX Brown Onyx
PKOX Pink Onyx
CROX Cream Onyx
BKOX Black Onyx
WHOX White Onyx
GROX Green Onyx
HNOX Honey Onyx

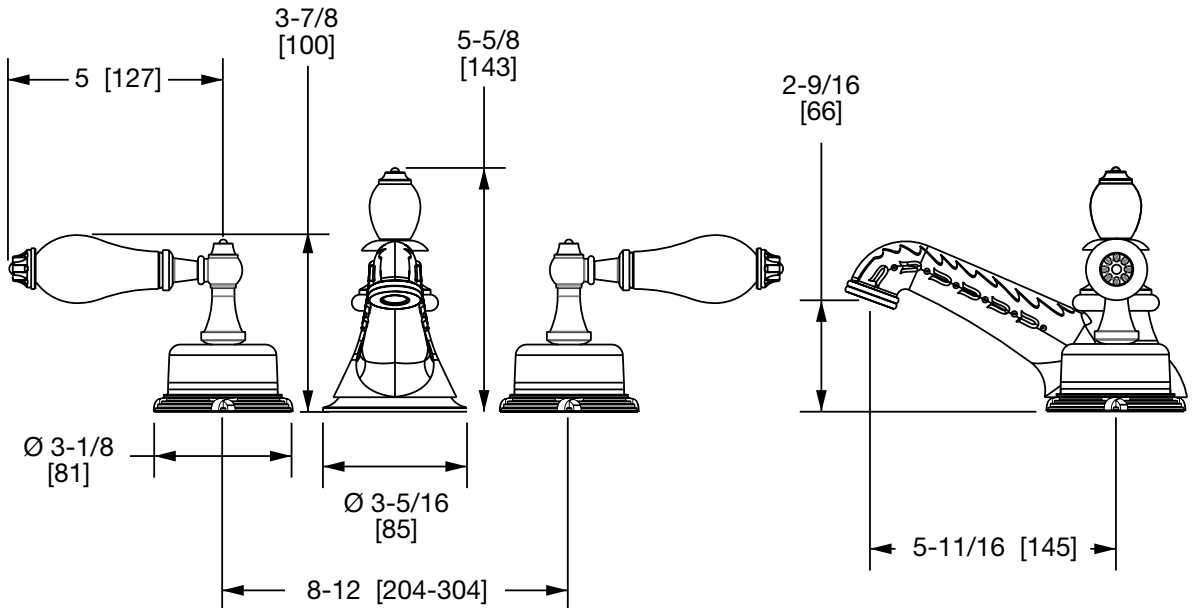

The measurements shown are for reference only. Products and specifications shown are subject to change without notice.

Rev B