#559 Pull To Open Sliding Door Mechanism

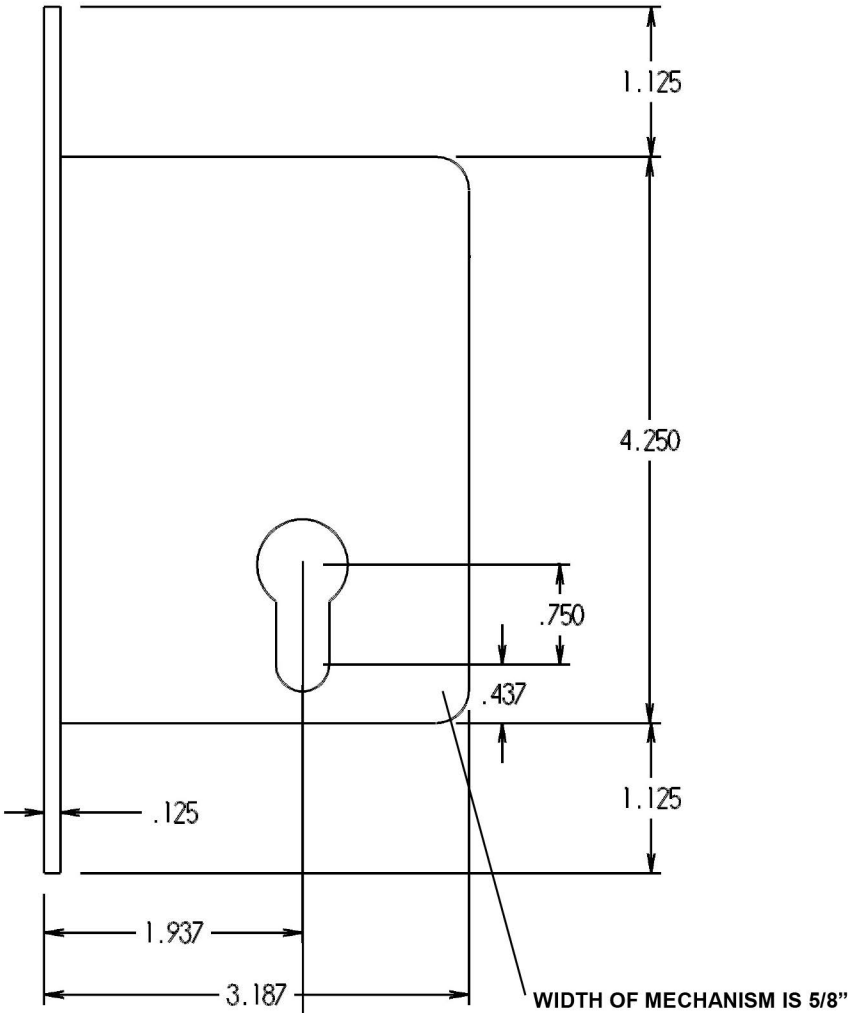

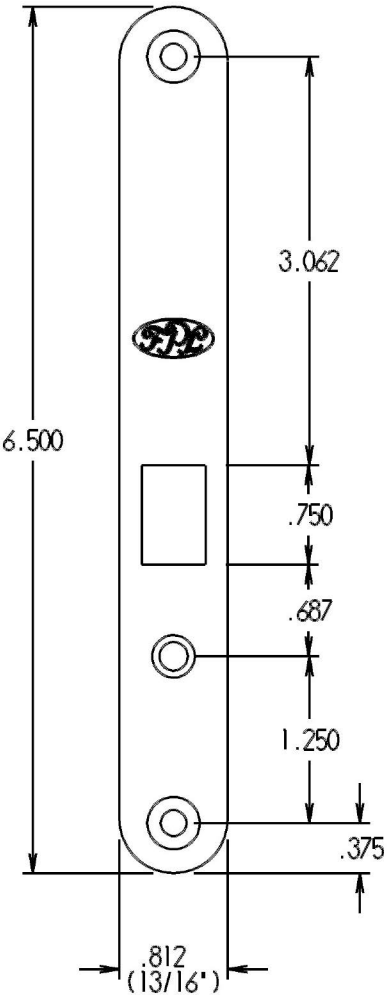

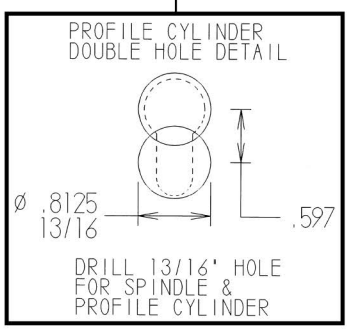
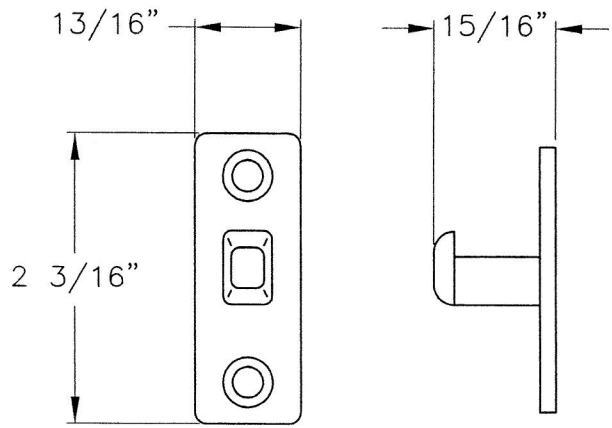
STRIKE FOR #559 MECHANISM