stonebaths

G38553 Wall Hung Vanity

Notes:
- Solid surface & MDF
- Blum hardware
- Chrome waste
- Optional matching stone waste
- 10 year manufacturers warranty

Finishes:
- Matte white
- Gloss white
- MDF timber colour range

Options:
- Stone waste

Size: 900 x 460 x 500(mm)

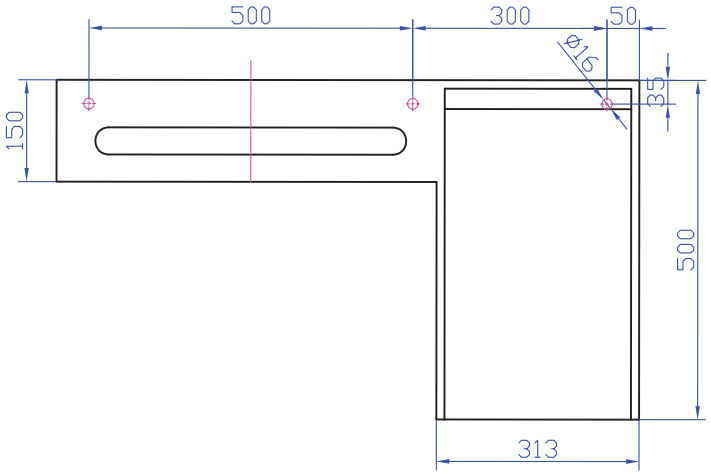

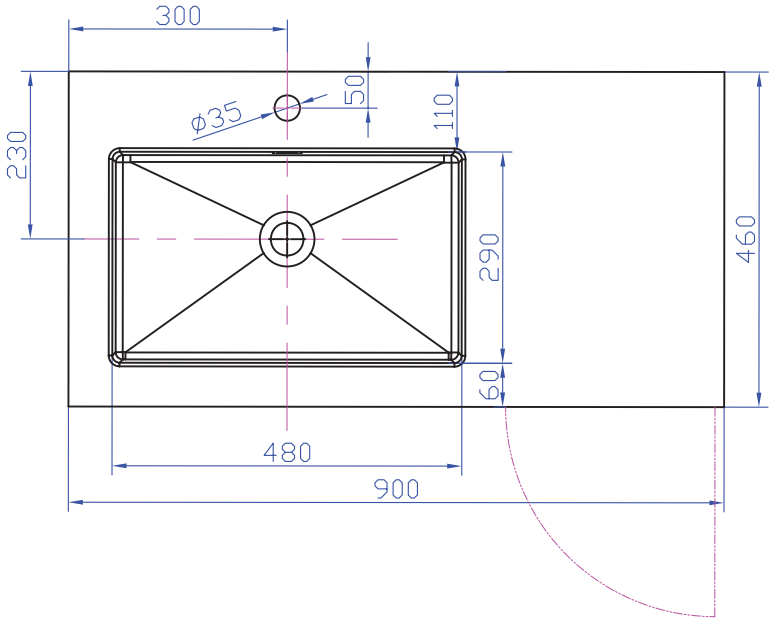

GIA Italii

Net Weight: 50kg
Gross Weight: 53kg
Unit: mm

AUSTRALIA
Phone: 1800 462 946
Email: info@stonebaths.com.au
Web: stonebaths.com.au

NEW ZEALAND
0800 001 872
info@stonebaths.co.nz
stonebaths.co.nz