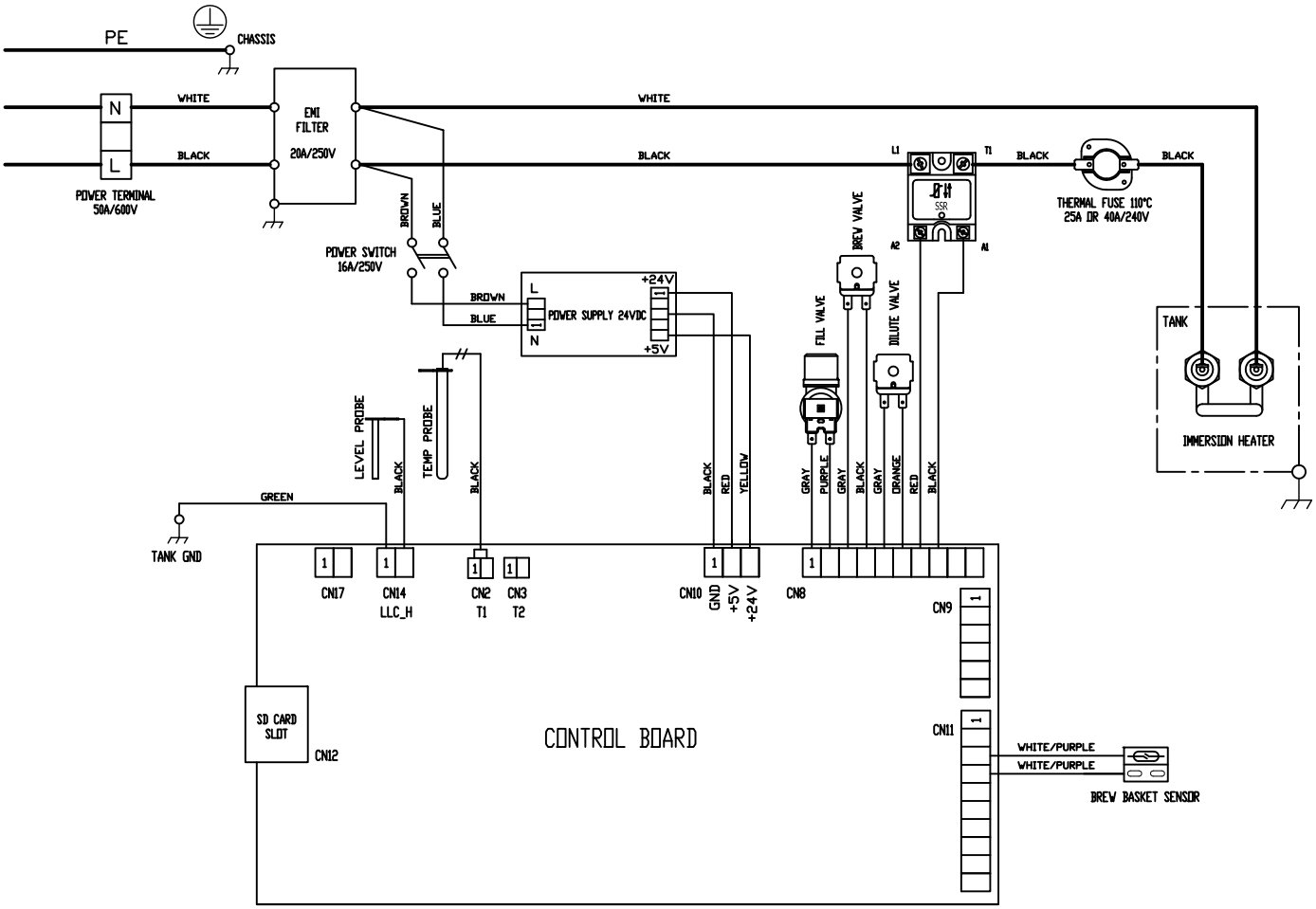
PE
CHASSIS
N
L
POWER TERMINAL
50A/600V
WHITE
BLACK
EMI
FILTER
20A/250V
WHITE
BLACK
L1
T1
A2
A1
SSR
BLACK
BLACK
THERMAL FUSE 110°C
25A OR 40A/240V
BROWN
BLUE
POWER SWITCH
16A/250V
BROWN
BLUE
L
N
POWER SUPPLY 24VDC
+24V
+5V
BREW VALVE
FILL VALVE
DILUTE VALVE
TANK
IMMERSION HEATER
LEVEL PROBE
BLACK
TEMP PROBE
BLACK
BLACK
RED
YELLOW
GRAY
PURPLE
GRAY
BLACK
GRAY
ORANGE
RED
BLACK
GREEN
TANK GND
CN17
CN14
LLC_H
CN2
T1
CN3
T2
CN10
GND
+5V
+24V
CN8
CN9
SD CARD
SLOT
CN12
CONTROL BOARD
CN11
WHITE/PURPLE
WHITE/PURPLE
BREW BASKET SENSOR

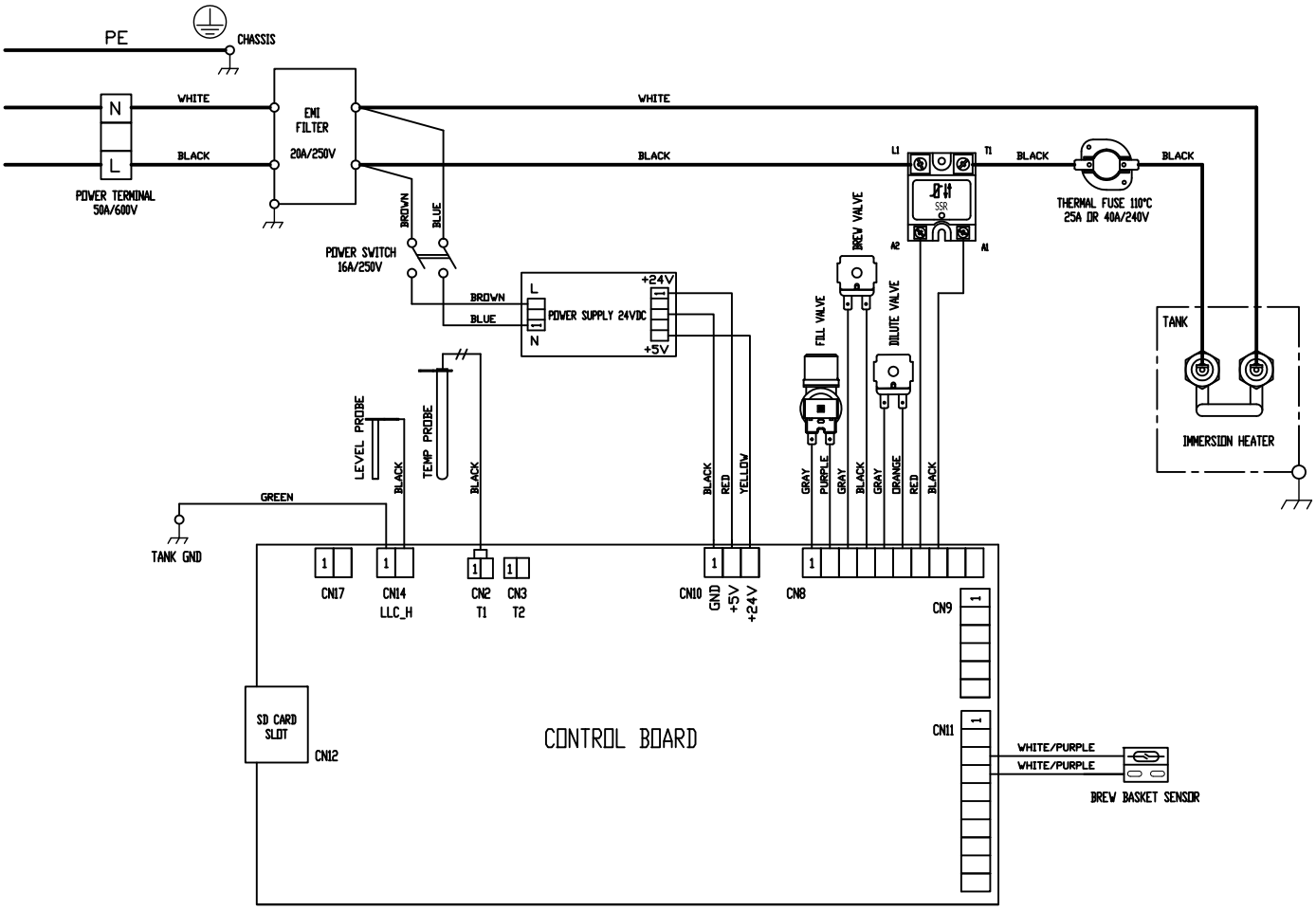
PE
CHASSIS
N
L
POWER TERMINAL
50A/600V
WHITE
BLACK
EMI
FILTER
20A/250V
WHITE
BLACK
L1
T1
A2
A1
SSR
BLACK
BLACK
THERMAL FUSE 110°C
25A OR 40A/240V
BROWN
BLUE
POWER SWITCH
16A/250V
BROWN
BLUE
L
N
POWER SUPPLY 24VDC
+24V
+5V
BREW VALVE
FILL VALVE
DILUTE VALVE
TANK
IMMERSION HEATER
LEVEL PROBE
BLACK
TEMP PROBE
BLACK
BLACK
RED
YELLOW
GRAY
PURPLE
GRAY
BLACK
GRAY
ORANGE
RED
BLACK
GREEN
TANK GND
CN17
CN14
LLC_H
CN2
T1
CN3
T2
CN10
GND
+5V
+24V
CN8
CN9
SD CARD
SLOT
CN12
CONTROL BOARD
CN11
WHITE/PURPLE
WHITE/PURPLE
BREW BASKET SENSOR