Schematic

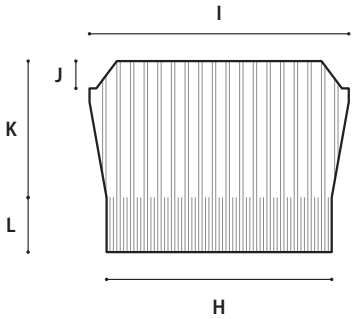

SLEEVE

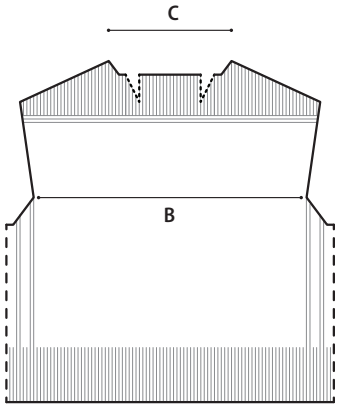

BACK

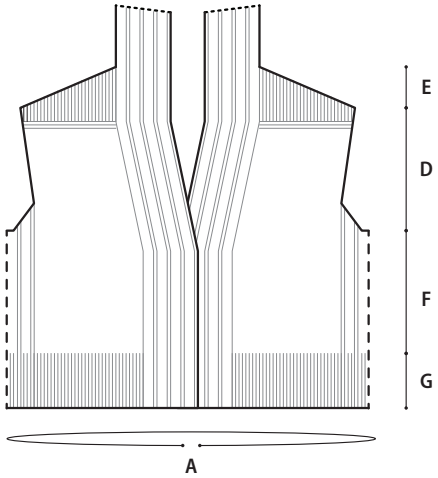

FRONTS

		sizes											
		1	2	3	4	5	6	7	8	9	10	11	
A	Chest Circumference (with front bands overlapping)	37½	41¾	45	48½	53¼	57½	60¼	63½	68½	71¼	76	in
		95.5	106	114.5	123	135.5	146	153	161.5	174	182	193	cm
B	Cross-Back Width	17	18½	19¾	21¼	21¼	22½	22½	24	24	25½	26¾	in
		43	47	50	54	54	57	57	61	61	65	68	cm
C	Neck Width	6¾	6¾	7¼	7½	8	8¾	8¾	9¼	9¼	9½	10	in
		17	17	18.5	19	20.5	22	22	23.5	23.5	24	25.5	cm
D	Armhole Depth	8	8¼	8½	8¾	9¼	9½	9¾	10	10¼	10½	11	in
		20.5	21	21.5	22	23.5	24	25	25.5	26	26.5	28	cm
E	Shoulder Depth	3	3¼	2¾	2¾	2¾	3	3	3	3	3¼	3½	in
		7.5	8.5	7	7	7	7.5	7.5	7.5	7.5	8.5	9	cm
F	Body Length, Underarm to Top of Hem	9	9	9	9	8¾	8½	8½	8½	8½	8¼	7¾	in
		23	23	23	23	22	21.5	21.5	21.5	21.5	21	19.5	cm
G	Hem Length	4	4	4	4	4	4	4	4	4	4	4	in
		10	10	10	10	10	10	10	10	10	10	10	cm
H	Cuff Width	13¾	14¾	15¾	16¾	17¾	18¾	19¾	20¾	21¾	22¾	23¾	in
		35	37.5	40	42.5	45	47.5	50	52.5	55	58	60.5	cm
I	Upper Sleeve Width	15¾	16¾	17¾	18¾	19¾	20¾	21¾	22¾	23¾	24¾	25¾	in
		40	42.5	45	47.5	50	52.5	55	58	60.5	63	65.5	cm
J	Sleeve Cap Depth	1½	1½	1½	2	2	2	1	1	1	1	1	in
		4	4	4	5	5	5	2.5	2.5	2.5	2.5	2.5	cm
K	Sleeve Length, Underarm to Top of Cuff	7¾	7¾	8	8	8¼	8¼	8½	8¾	8¾	9	9¼	in
		19.5	19.5	20.5	20.5	21	21	21.5	22	22	23	23.5	cm
L	Cuff Length	4	4	4	4	4	4	4	4	4	4	4	in
		10	10	10	10	10	10	10	10	10	10	10	cm