Product Name: 15' Rectangle Hanging Sign **SKU Name:** 15RECHS

*****WE CAN NO LONGER MAKE ANY CHANGES ONCE APPROVED AND PRINTED.*****

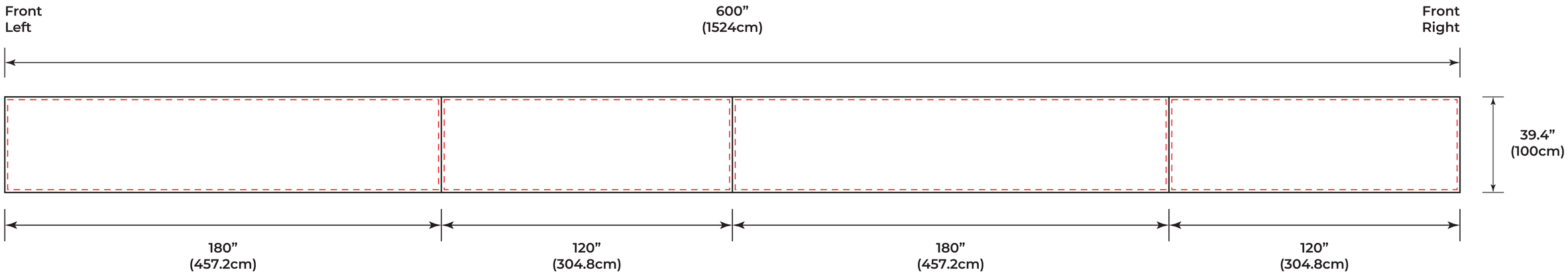

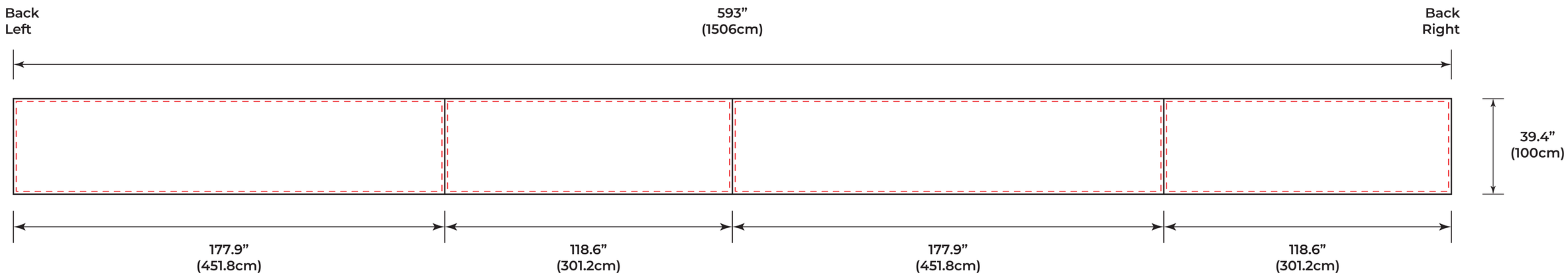

PROOF SCALED TO ACTUAL SIZE (25%)

Disable the safe lines “---” when saving the proof.

PMS Colors

- PMS XXXX C
- PMS XXXX C
- PMS XXXX C
- PMS XXXX C
- PMS XXXX C
- PMS XXXX C
- PMS XXXX C
- PMS XXXX C
- PMS XXXX C
- PMS XXXX C

DISCLAIMER

Artist: XXXXX

- Make sure all spelling and artwork is correct.
- Proofs and sizes may not always be 100% accurate.
- Perfect color matches are not guaranteed without a standard Pantonce C reference.
- The colors you see on your monitor screen may vary from the actual printed product.