3m x3m

FRONT

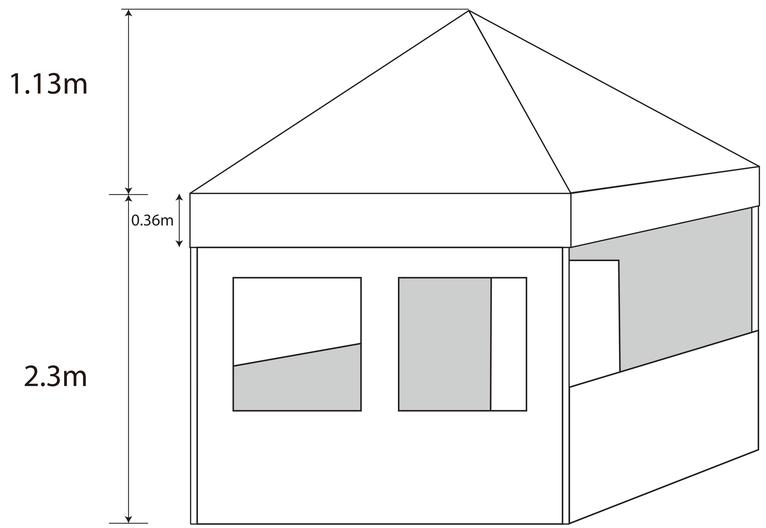

BACK

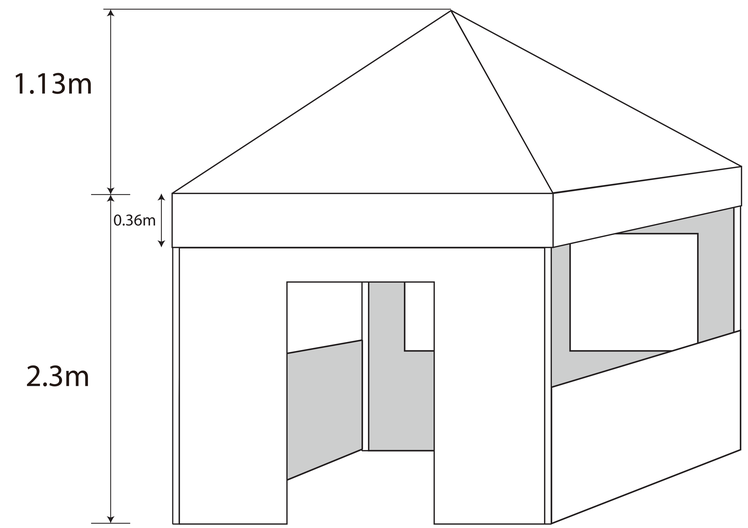

Full Back Wall Door

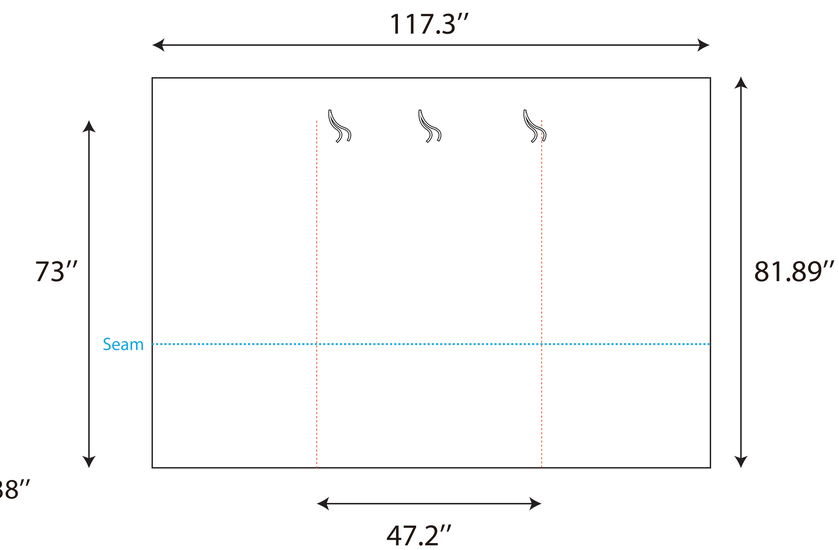

CANOPY TOP

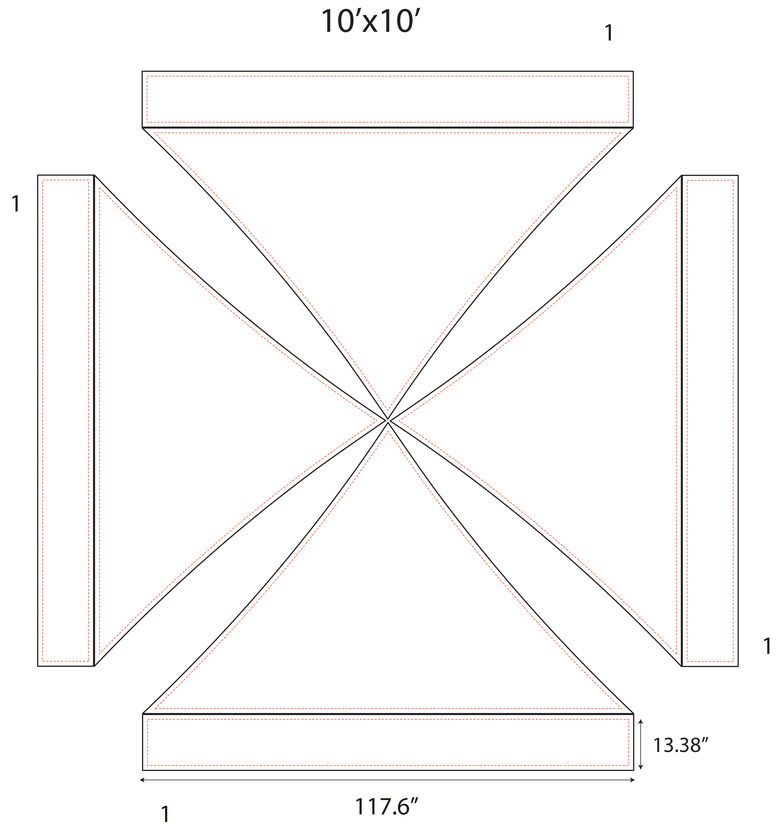

Valance

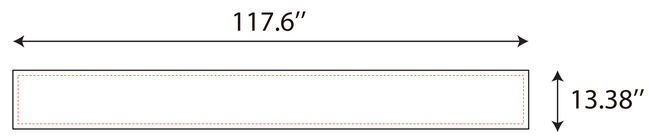

Half side wall (right)

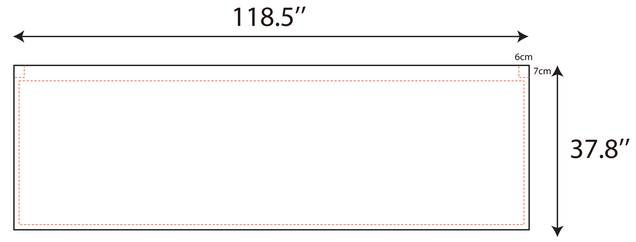

Half side wall (left)

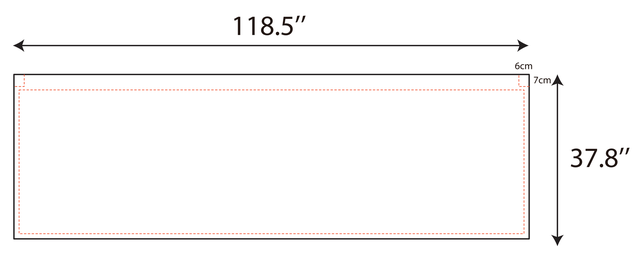
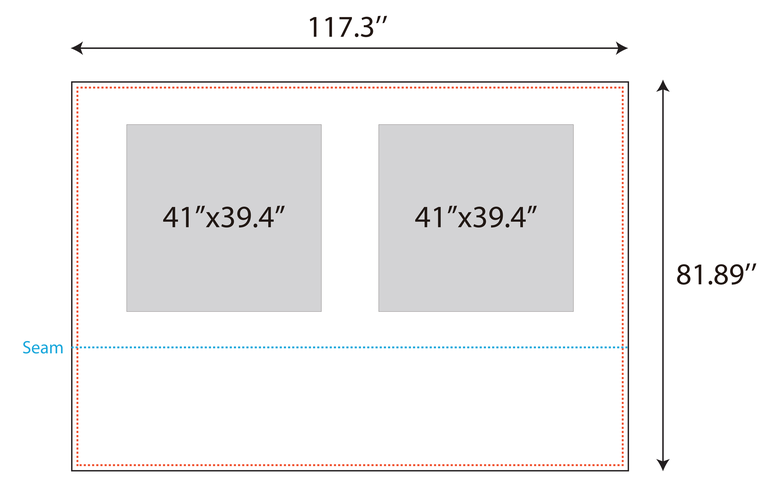
Full Front Window Wall