SUMMERSET
PROFESSIONAL GRILLS

## Madera Series 30″ Wood Integrated #304 Stainless Steel Double Access Door

| | |
|---|---|
| **Model** | **SSMDD-30** |
| **Cutout Dimensions*** | **W28” x H17 1/2”** |
| **Overall Dimensions**** | **W30” x H20” x D4”** |

- **#304 North American Stainless Steel Construction**
- **Sustainably Sourced Teak or Ipe Option**
- **Wood Specifications Available for Customization**
- **Removable Bracket for Wood Extraction and Maintenance**
- **Door Storage Shelf**
- **Magnetic Latch and Weather Resistant Gasket for Trash Drawer Seal**

*** Manufacturer Suggested Cutout Dimensions**

**** Manufacturer Approximate Overall Dimensions**

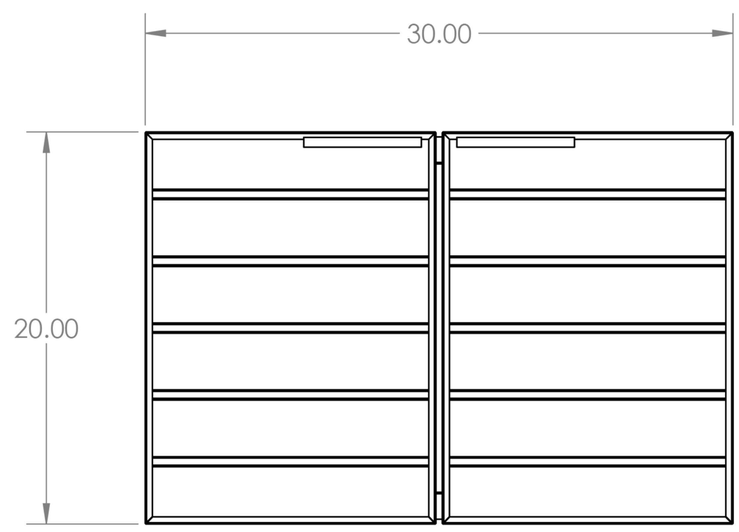


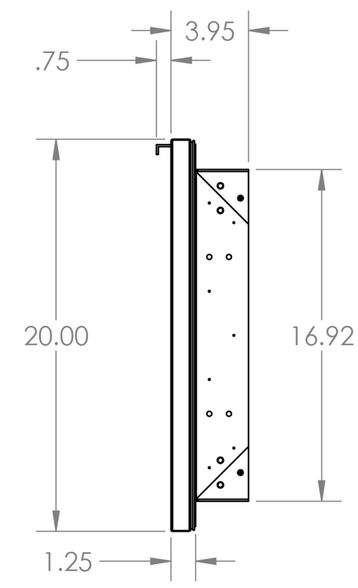


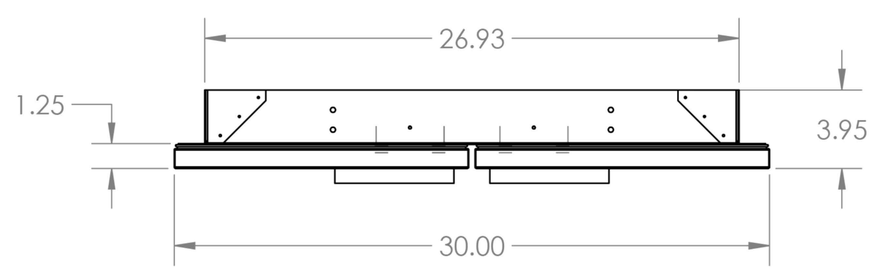


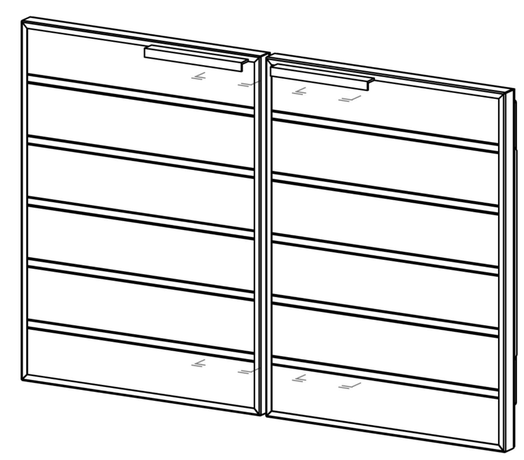

## NOTES

## Suggested Cutout Dimensions*

**(W) 28” x (H) 17 1/2”**
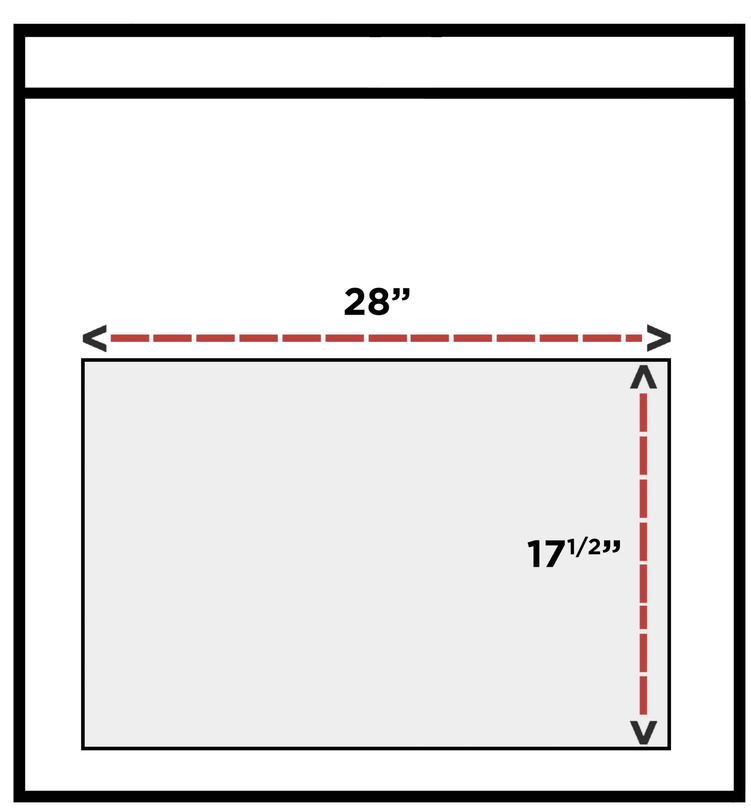
## Island Front View