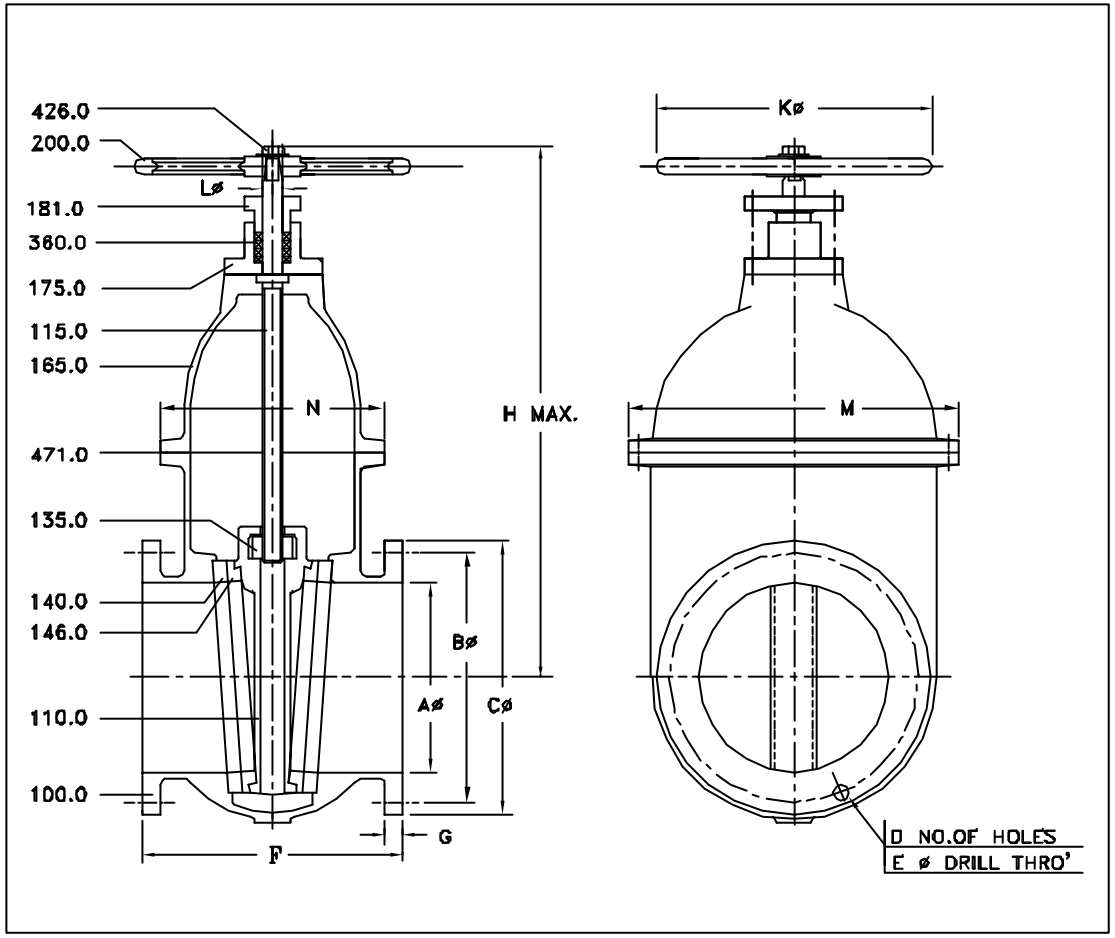


| SR. NO. | PART NO. | DESCRIPTION | MATERIAL | QTY. |
|---|---|---|---|---|
| 01 | 100.0 | VALVE BODY | CI IS210 GR FG260 | 01 |
| 02 | 110.0 | WEDGE | CI IS210 GR FG260 | 01 |
| 03 | 115.0 | SPINDLE | STEEL IS 6603 GR 12Cr12 | 01 |
| 04 | 135.0 | SPINDLE NUT | BRONZE IS:318,Gr.LTB2 | 01 |
| 05 | 140.0 | BODY FACE RING | BRONZE IS:318,Gr.LTB2 | 02 |
| 06 | 140.0 | WEDGE FACE RING | BRONZE IS:318,Gr.LTB2 | 02 |
| 07 | 165.0 | DOME | CI IS210 GR FG260 | 01 |
| 08 | 175.0 | STUFFING BOX | CI IS210 GR FG200 | 01 |
| 09 | 181.0 | GLAND | CI IS210 GR FG200 | 01 |
| 10 | 200.0 | HAND WHEEL | CI IS210 GR FG200 | 01 |
| 11 | 360.0 | GLAND PACKING | GREASY JUTE PACKING | SET |
| 12 | 426.0 | SCREW FOR HAND WHEEL | IS:3167 CL 4.6 | 01 |
| 13 | 471.0 | GASKET FOR DOME | NATURAL RUBBER | 01 |

NOTE:
1) FLANGE DRILLING FOR 50mm & 65mm AS PER IS:14846 TABLE 3A.
   FLANGE DRILLING FOR 80mm TO 300mm AS PER IS:1538 TABLE 4 & 6.
2) ALL DIMENSIONS ARE IN mm.
3) CLOSING DIRECTION: CLOCKWISE.

| HYDRO TEST: RATING: PN1.6 | | |
|---|---|---|
| TEST | BODY | SEAT |
| PRESSURE (Kg/cm2) | 24 | 16 |
| DURATION (min.) | 5 | 2 |

| IT. NO. | QTY | VALVE SIZE | A DIA. | F ±2 | M APPROX. | N APPROX. | L DIA | C DIA. | G | B PCD | D | E DIA. | K DIA. | H MAX. |
|---|---|---|---|---|---|---|---|---|---|---|---|---|---|---|
| 09.0 | -- | 300 | 300 | 356 | 574 | 326 | 36 | 445 | 27.5 ±4 | 400 | 12 | 23 | 640 | 910 |
| 08.0 | -- | 250 | 250 | 330 | 482 | 274 | 36 | 406 | 26±4 | 350 | 12 | 23 | 640 | 810 |
| 07.0 | -- | 200 | 200 | 292 | 444 | 280 | 32 | 340 | 24.5 ±4 | 295 | 8 | 23 | 450 | 720 |
| 06.0 | -- | 150 | 150 | 267 | 312 | 211 | 28 | 285 | 23 ±4 | 240 | 8 | 23 | 360 | 555 |
| 05.0 | -- | 125 | 125 | 254 | 280 | 190 | 28 | 250 | 22.5 ±4 | 210 | 8 | 19 | 360 | 515 |
| 04.0 | -- | 100 | 100 | 229 | 244 | 175 | 28 | 220 | 22 ±4 | 180 | 8 | 19 | 360 | 460 |
| 03.0 | -- | 80 | 80 | 203 | 218 | 152 | 24 | 200 | 21 ±4 | 160 | 4 | 19 | 280 | 405 |
| 02.0 | -- | 65 | 65 | 190 | 214 | 151 | 24 | 185 | 16 +2 −0 | 145 | 4 | 19 | 280 | 365 |
| 01.0 | -- | 50 | 50 | 178 | 143 | 143 | 24 | 165 | 16 +2 −0 | 125 | 4 | 19 | 280 | 350 |

| REV.NO. | DESCRIPTION OF REVISION | SIGN/DATE |
|---|---|---|
| | | |

| | |
|---|---|
| VALVE TYPE | NON RISING SPINDLE SLUICE VALVES (AS PER IS:14846) |
| DESCRIPTION | GENERAL ARRANGEMENT & CROSS SECTIONAL DRAWING |
| KBL O/A No. | ---------- |
| CLIENT | ---------- |
| END USER | ---------- |
| PROJECT | ---------- |

| DRAWN BY | A.B.K. 09.09.08 | CHECKED BY | V.D.D. 09.09.08 | APPROVED BY | R.M.I. 09.09.08 |
|---|---|---|---|---|---|

KIRLOSKAR BROTHERS LIMITED
KONDHAPURI (PUNE)

DRG. NO.
TC 2A2.SD.0001.0