OPERATING INSTRUCTIONS

1.The handle is located on the top of the unit,around the solar panel.
2.After the unit has fully charged,change the switch to the desired position to select the operating mode.

WARNING & NOTICE

1.Do not look directly at the LED light for a long period of time, or it may damage your eyes.
2.Do not attempt to disassemble or remodel the product. Any changes can be dangerous and will void the warranty.
3. Keep away from any flammable items, or explosion, property damages,or casual injuries may occur.
4. Keep the solar panel clean to make sure the product can be properly charged. Frequently clean the solar panel as needed. Avoid scratching on the panel or it may lower charging efficiency.

PRODUCT SPECIFICATIONS

Material	ABS	Solar Panel	2.80 x 2.72 inch/1W
Battery	Li-ion battery 18650 2200mAh	Waterproof Performance	IP65
Size	4.84 x 4.84 x11.73 inch	Accessories	1 * Solar Lantern 1 * Bracket kit 1 * User manual 1* Mounting sticker 3* Screws/3*Anchors

This product has a 1-year limited warranty .For further information please visit our website at **www.techkogroup.com**

Copyright Reserved
Patent Pendlng: US 16/412,865

1-888-883-2456
support@techkogroup.com

Solar Hanging Lantern

USER MANUAL

TECHKO®

Model: STL-236

▲**Please carefully read this manual before using the product.**
▲**Keep the manual with you for reference as needed.**

FULLY CHARGE THE PRODUCT BEFORE USING

1. Secure the unit and fully charge in direct sunlight and select desired operating mode before use.
2. Charging time may vary depending on the weather, temperature and seasons.
3. Do not place the product indoors or any place where there is no direct sunlight, the product will not charge properly.

INSTALLATION INSTRUCTIONS
(Wall with Bracket Kit)

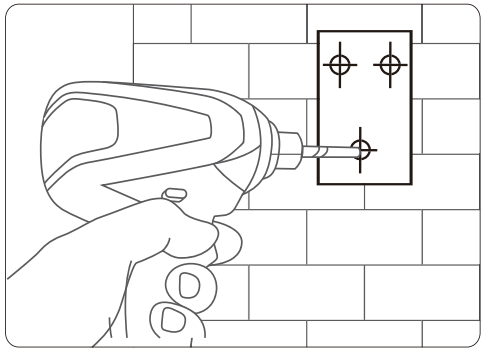

1. Place the mounting sticker in a location where the product will be installed to. Then drill 3 holes into the guides shown on the mounting sticker

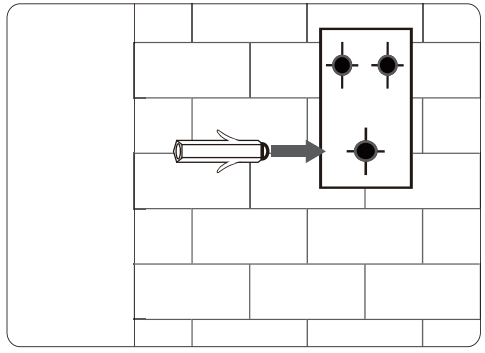

2. Insert the supplied anchors into the drilled holes.

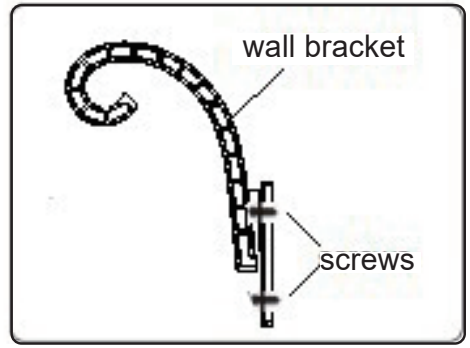

3.Place and align the wall bracket against the wall and then use a screwdriver to secure the bracket with the provided screws.

4.Place the solar unit to the bracket.

SWITCH & FUNCTIONS

▲ **The switch is on the top of the solar unit.**

1. Slide the switch to the desired position.
   a. White - Changes the lights color to a bright white light
   b. Amber - Changes the lights color to a warm amber light
   c. Off - Move the switch to the center to turn the solar light off.

▲ The product can be charged in all operating modes. The solar panel is equipped with daylight sensor. The product will charge in direct sunlight during the daytime and automatically turn on at dusk.

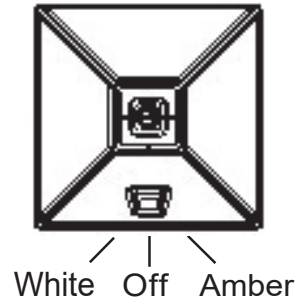

▲ **Install the unit in a place where the solar panel can be continually exposed to the sun.**
▲ **Avoid placing the unit where shade from buildings or objects would block the solar panel.**