Visitez Traxxas.com/manuals pour télécharger les instructions dans votre langue.
Visite la página Traxxas.com/manuals para descargar el instrucciones en su idioma.
Auf Traxxas.com/manuals, können Sie anleitung in Ihrer Sprache downloaden.

Suspension Pin Set Installation Instructions

Covers Part #8940X

Kit contents:
- Suspension pins, 4x64mm (4)
- Suspension pins, 4x47mm (4)
- Suspension pins, 4x38mm (4)
- Suspension pins, 4x33mm (4)
- Suspension pins, 4x22mm (4)
- Suspension pin retainers (8)
- 3x8mm BCS (14)
- 3x6mm BCS (4)

Tools needed:
- 2.5mm hex wrench
- 2.0mm hex wrench

Front Assembly

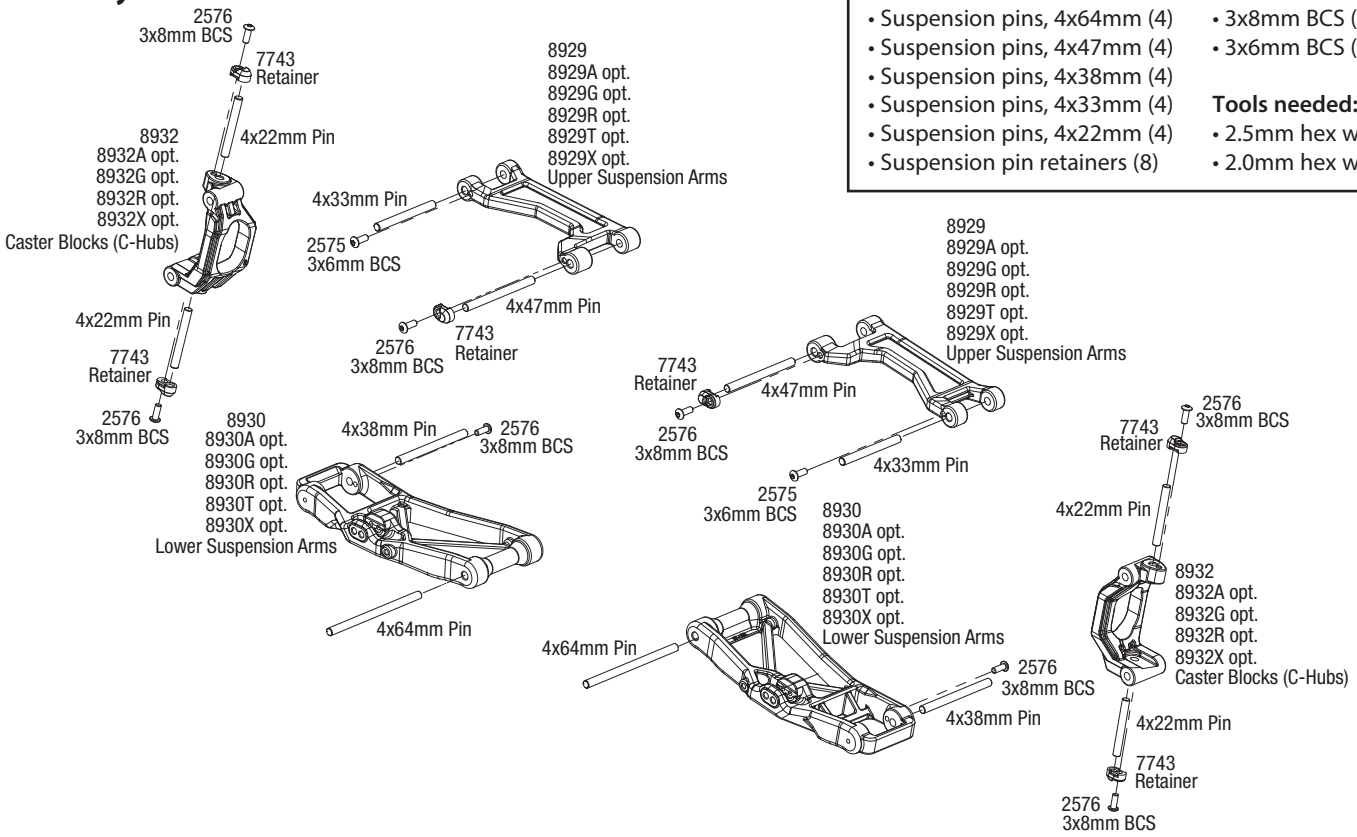

Rear Assembly

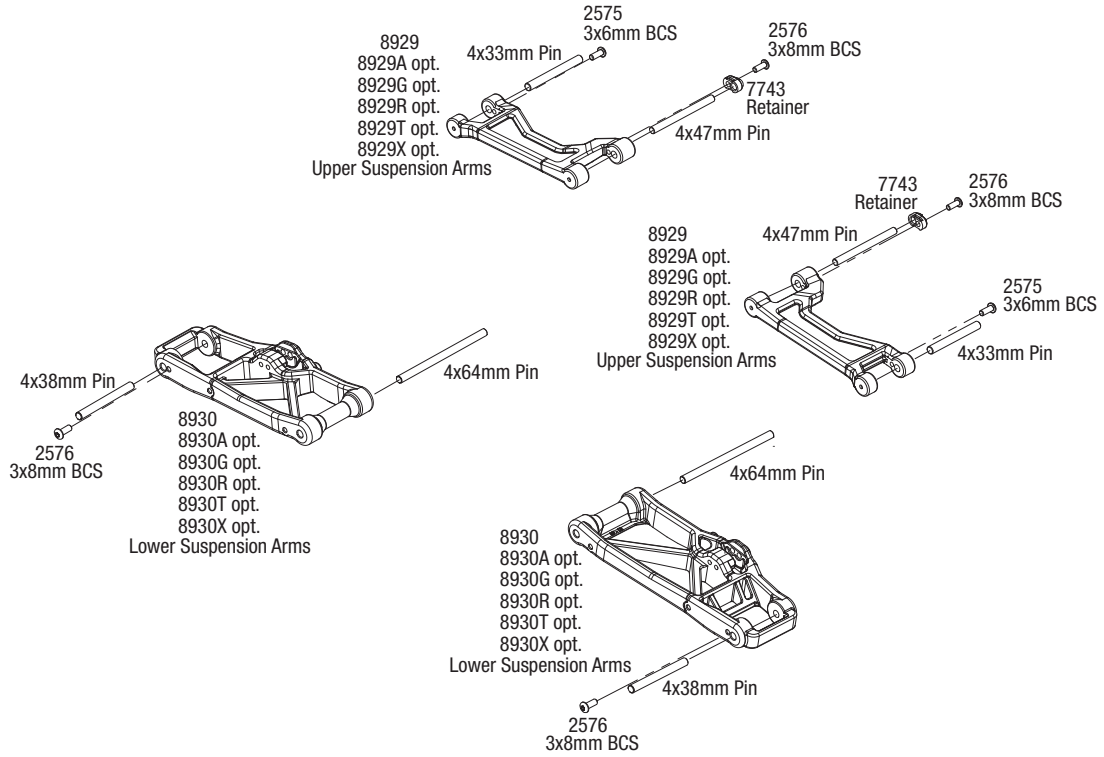

0 10 20 30 40 50 60 70 80 90 100 mm

Traxxas, 6250 Traxxas Way, McKinney, TX 75070, Phone: 972-549-3000, Fax: 972-549-3011, e-mail: support@Traxxas.com

KC2841-R00 Rev 200213