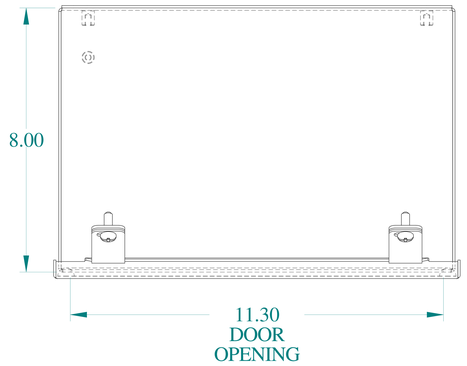

TOP VIEW

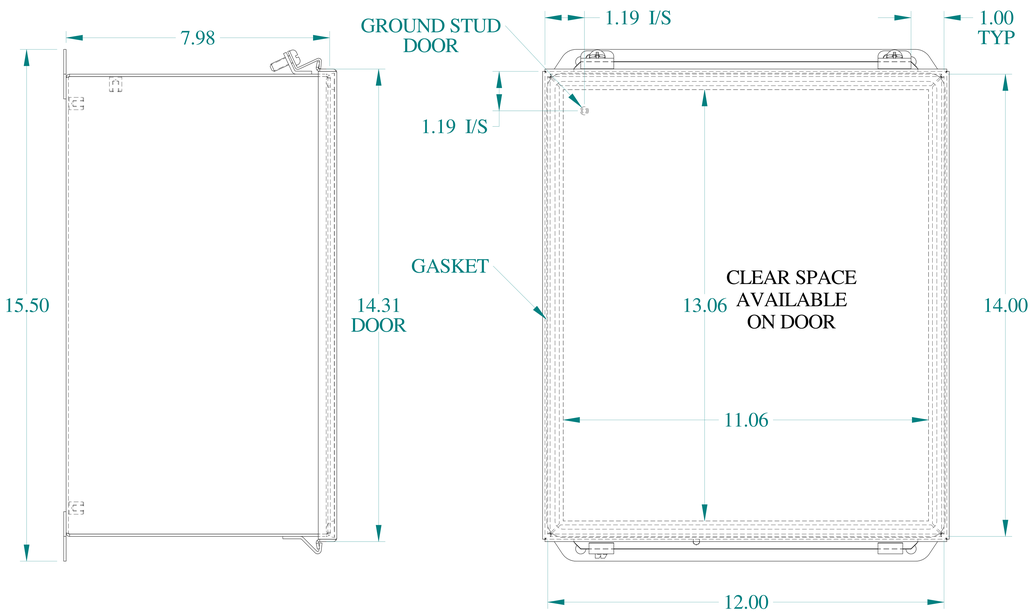

SIDE VIEW

FRONT VIEW

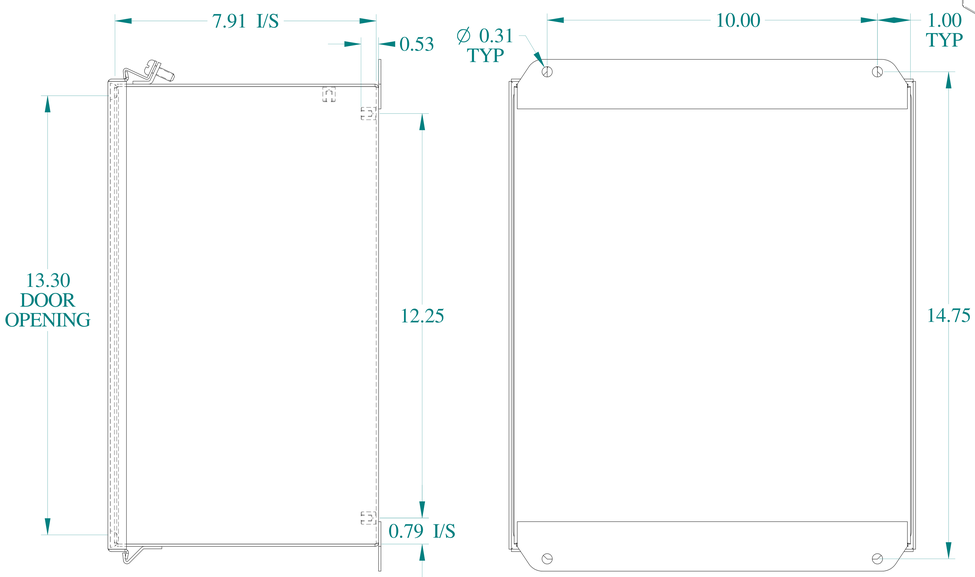

SIDE VIEW

BACK VIEW

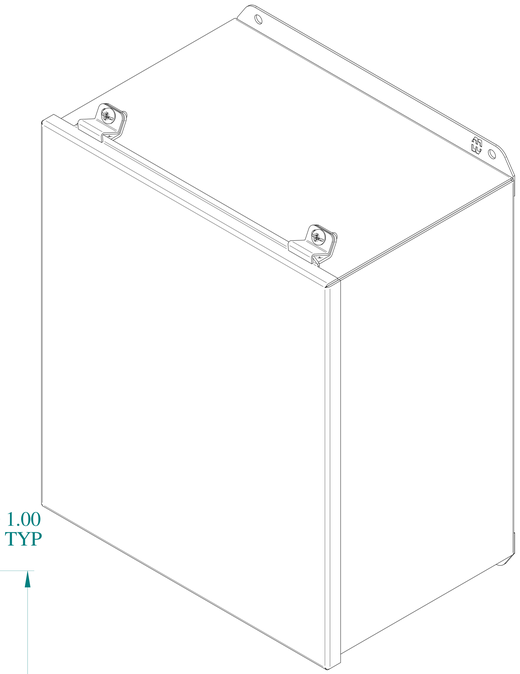

ISOMETRIC VIEWS

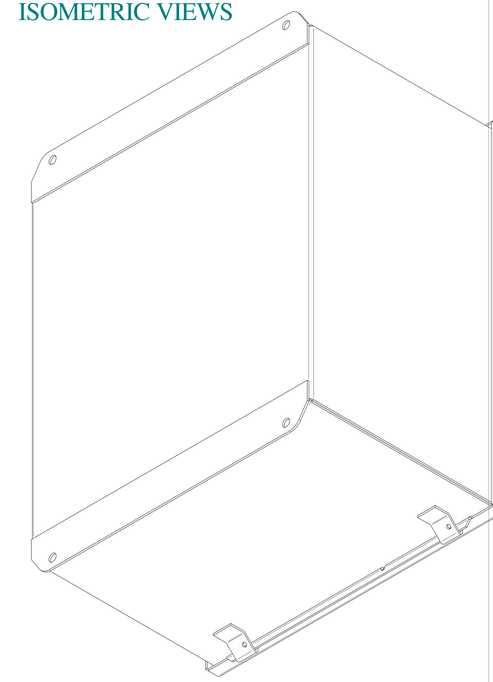

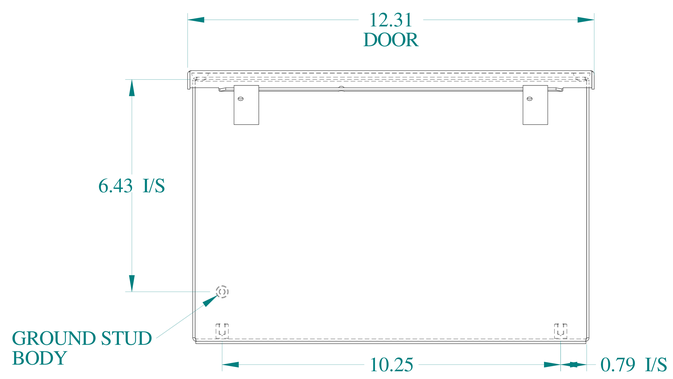

BOTTOM VIEW

HAMMOND MANUFACTURING®

www.hammondmfg.com

Data subject to change without notice.

Part # : HJ14128LP	Date : Nov. 12, 2018

Link: www.hammfg.com/HJ14128LP