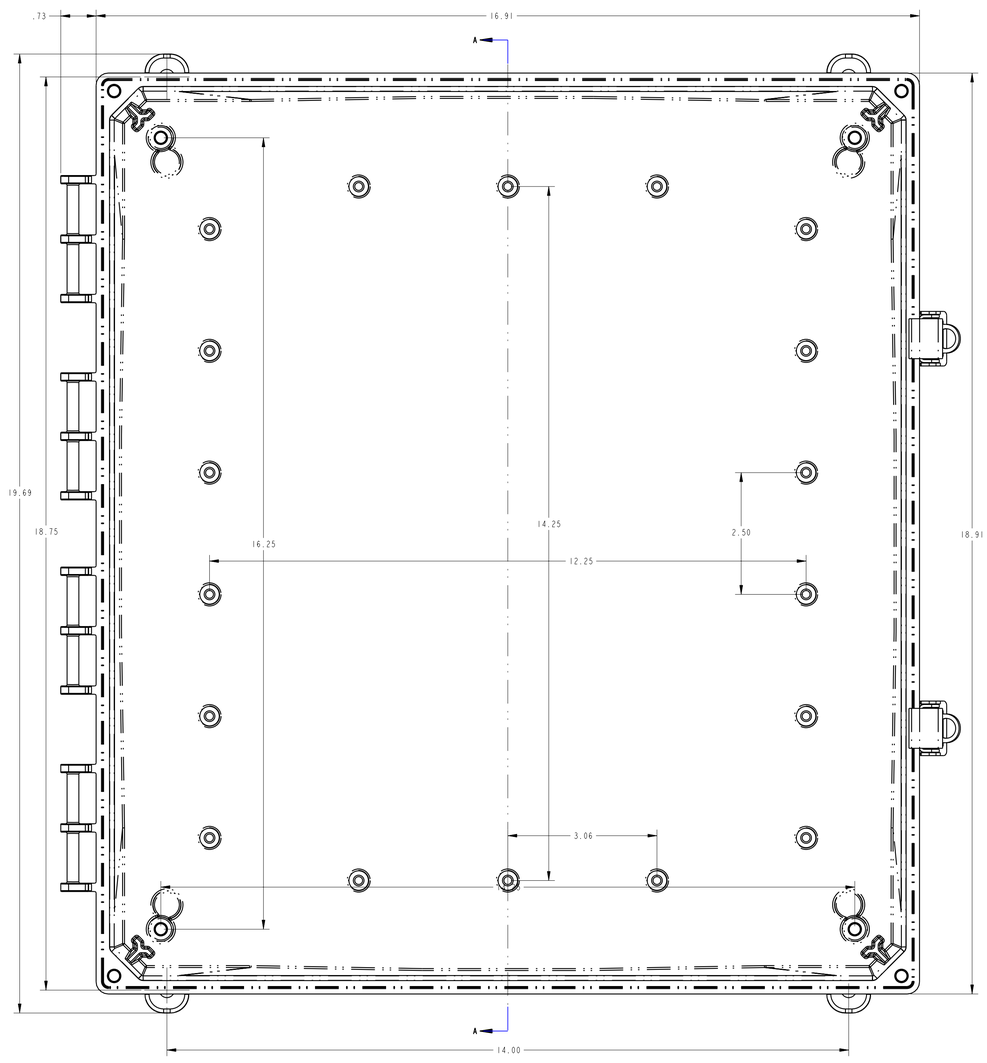

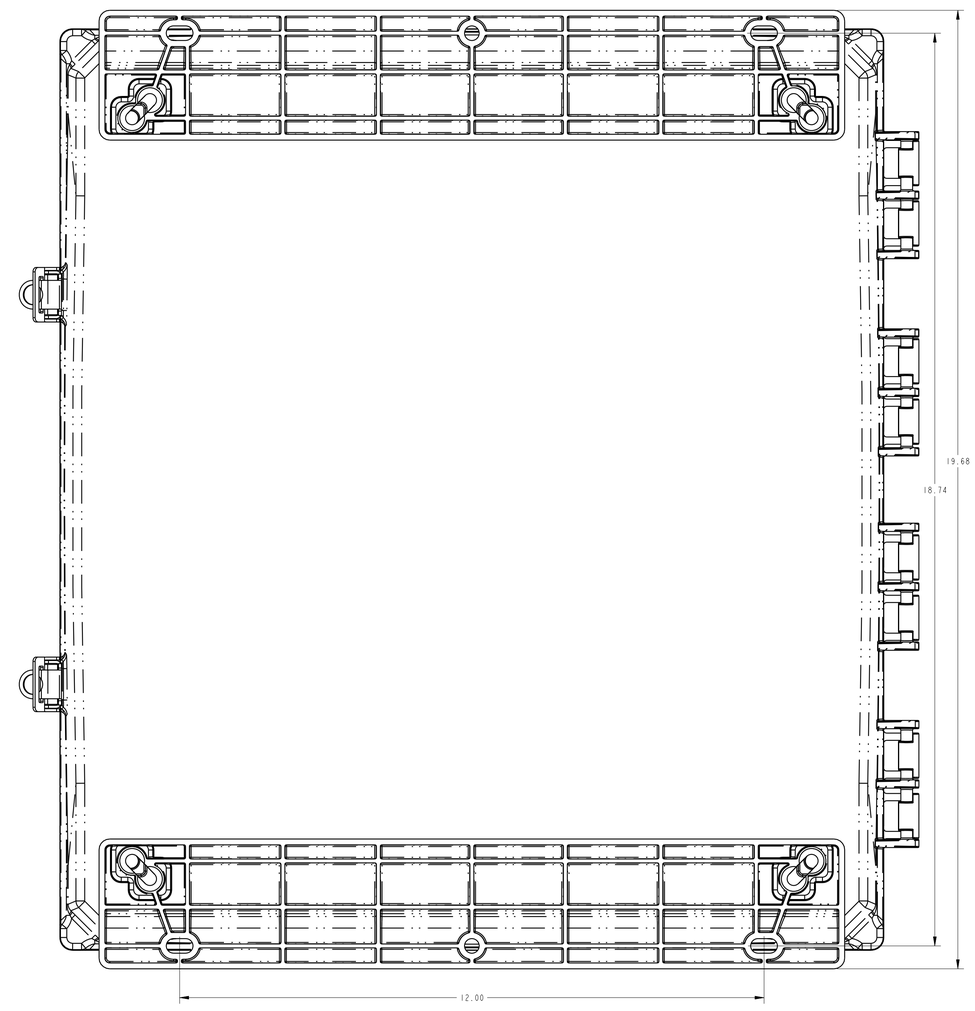

PART NO.
18X16X10
REVISION NO. -

CONFIDENTIAL
THIS PRINT AND THE SPECIFICATIONS ARE THE PROPERTY OF INTEGRA INC. AND HAS BEEN LOANED FOR THE EXCLUSIVE USE THAT IT WILL NOT BE REPRODUCED, REVEALED TO OR USED FOR MANUFACTURE FOR OTHERS, AND WILL BE RETURNED UPON REQUEST.

ICU DATE 5-18-2008
INTEGRA, INC.
ALL RIGHTS RESERVED.

TOLERANCES
ALL DIMENSIONS EXCEPT WHERE OTHERWISE SHOWN.
ANGLES ± 0°30'
DECIMALS ± .01 XX ± .005 XXX
FRACTIONS ± ~

REVISIONS

CHNG.	CHNG. LOCATION	DESCRIPTION	BY	DATE	NOT. NO.

INTEGRA INC.
WILLOUGHBY, OHIO

18X16X10 HINGED BOX ASSEMBLY

SCALE FULL
DR. BY MC DESIGN
CHK'D
DATE 5-18-2008
PART NO. 18X16X10
SHEET 1 OF 4
REVISION -

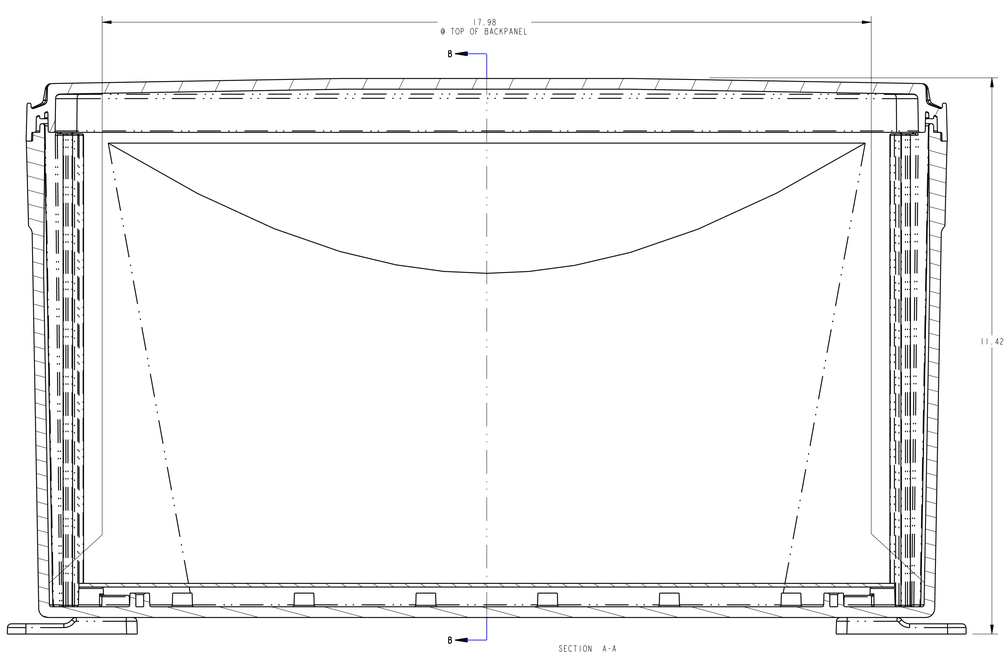

SECTION A-A

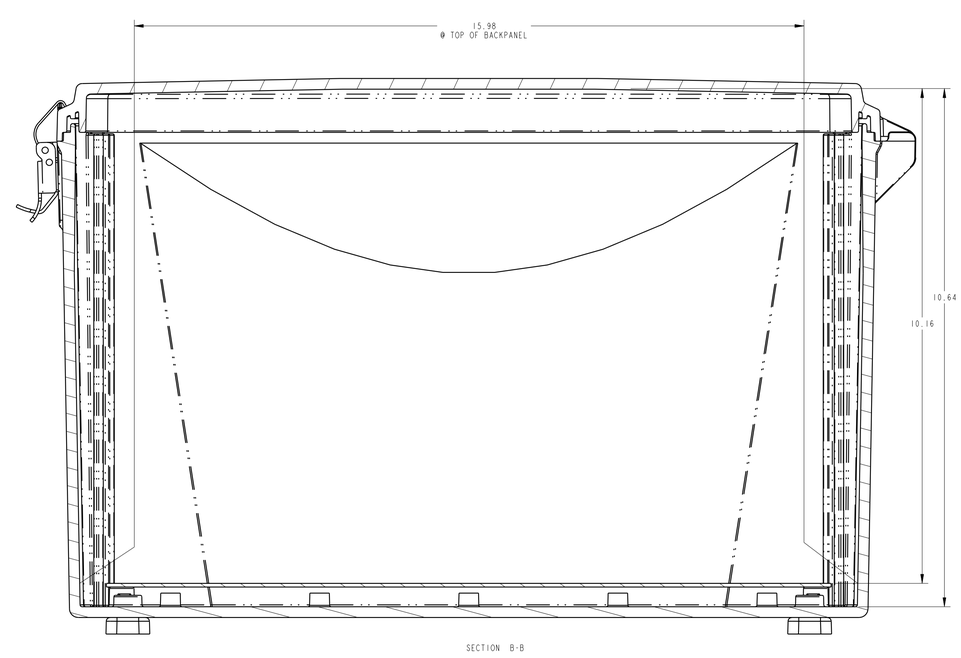

SECTION B-B

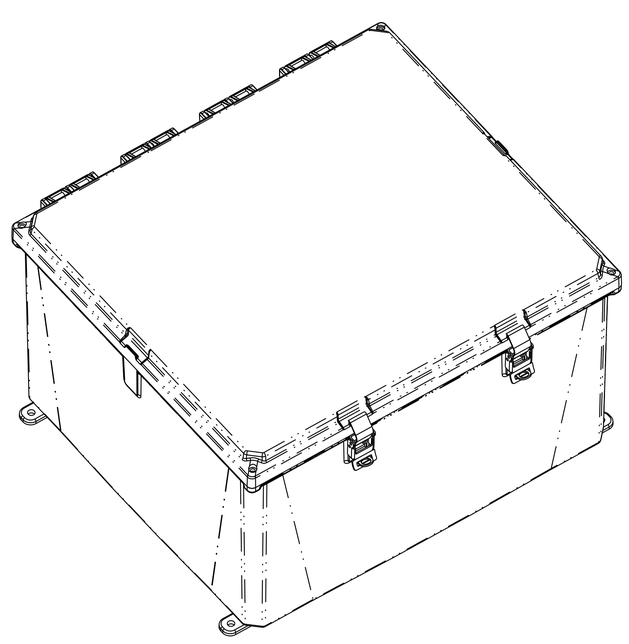

SCALE 0.500

PART NO.
18X16X10
REVISION NO. -

DO NOT SCALE DRAWING

CONFIDENTIAL
THIS PRINT AND THE SPECIFICATIONS ARE THE PROPERTY OF INTEGRA INC. AND HAS BEEN LOANED FOR THE EXCLUSIVE USE THAT IT WILL NOT BE REPRODUCED, REVEALED TO OR USED FOR MANUFACTURE FOR OTHERS, AND WILL BE RETURNED UPON REQUEST.

ICU DATE 5-18-2008
INTEGRA, INC.
ALL RIGHTS RESERVED.

TOLERANCES
ALL DIMENSIONS EXCEPT WHERE OTHERWISE SHOWN.
ANGLES ± 0°30'
DECIMALS ± .01 XX ± .005 XXX
FRACTIONS ± ~

REVISIONS

CHNG.	CHNG. LOCATION	DESCRIPTION	BY	DATE	NOT. NO.

INTEGRA INC.
WILLOUGHBY, OHIO

18X16X10 HINGED BOX ASSEMBLY

SCALE FULL
DR. BY MC DESIGN
CHK'D
DATE 5-18-2008
PART NO. 18X16X10
SHEET 2 OF 4
REVISION -