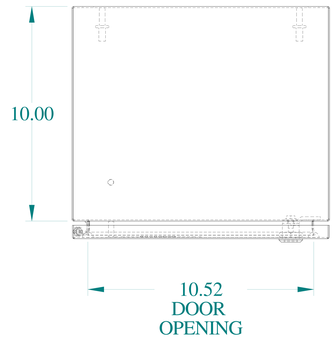

TOP VIEW

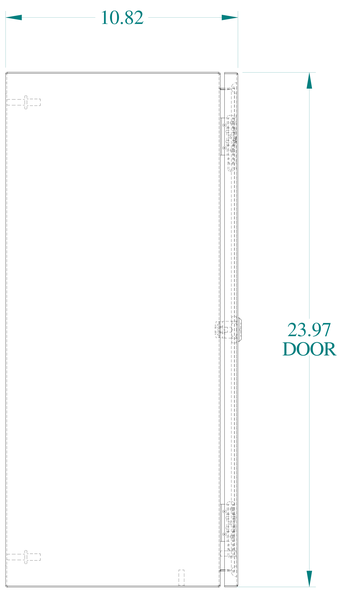

SIDE VIEW

FRONT VIEW

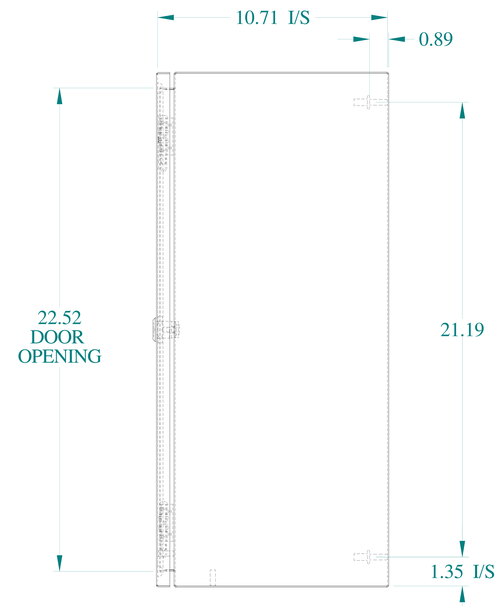

SIDE VIEW

BACK VIEW

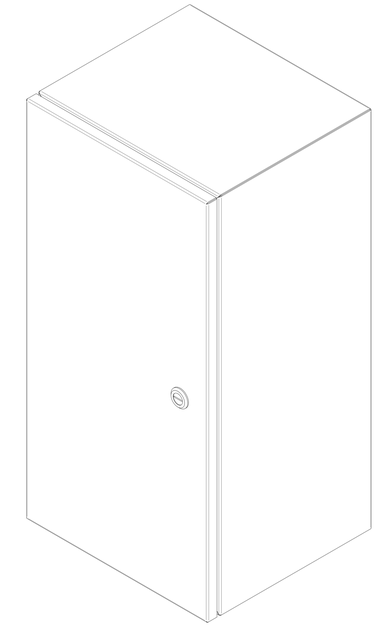

ISOMETRIC VIEWS

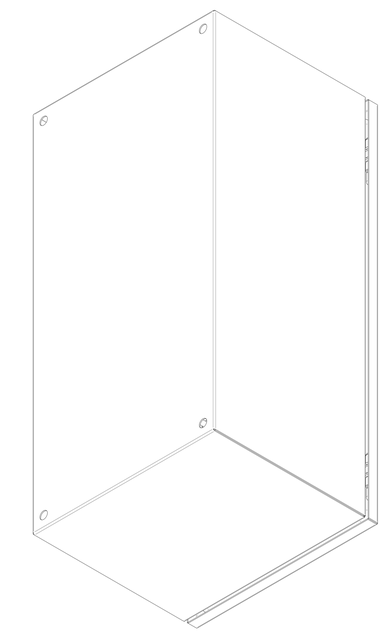

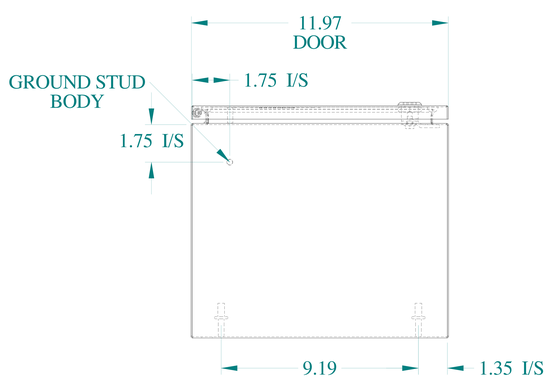

BOTTOM VIEW

HAMMOND MANUFACTURING®

www.hammondmfg.com

Data subject to change without notice.

Part # : EN4SD241210GY	Date : Nov. 5, 2018

Link: www.hammfg.com/EN4SD241210GY