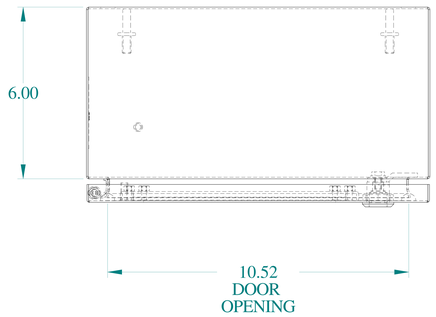

TOP VIEW

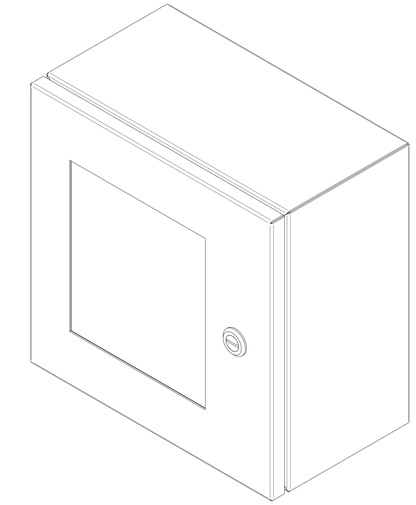

ISOMETRIC VIEWS

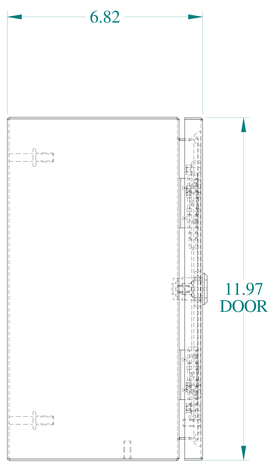

SIDE VIEW

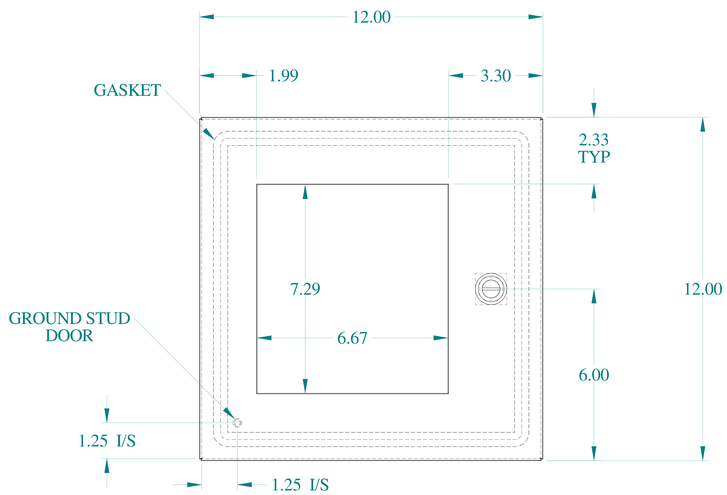

FRONT VIEW

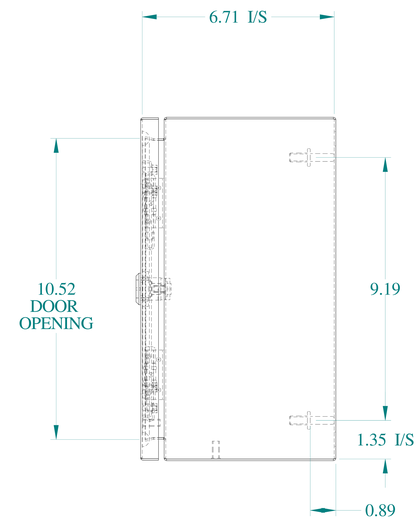

SIDE VIEW

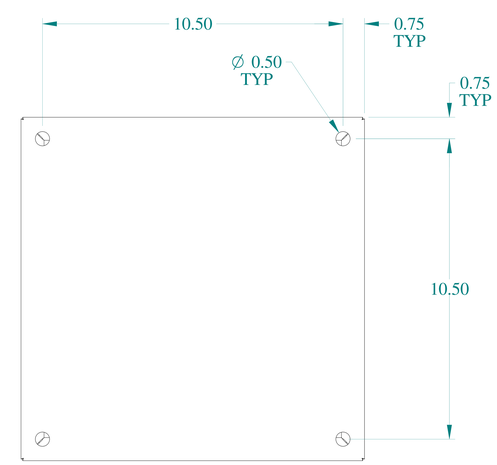

BACK VIEW

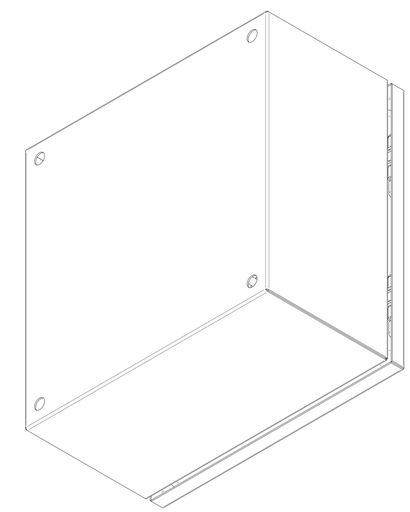

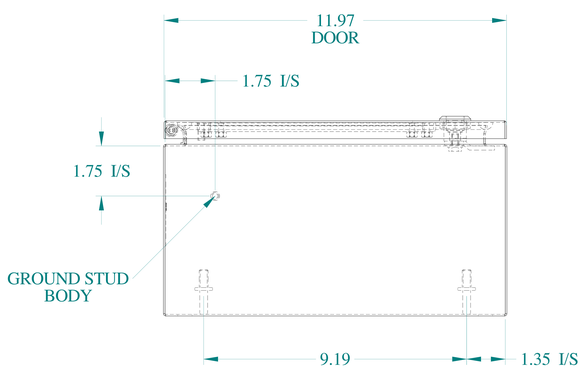

BOTTOM VIEW

HAMMOND MANUFACTURING®

www.hammondmfg.com

Data subject to change without notice.

Part # : EN4SD12126WSS	Date : Nov. 7, 2018

Link: www.hammfg.com/EN4SD12126WSS