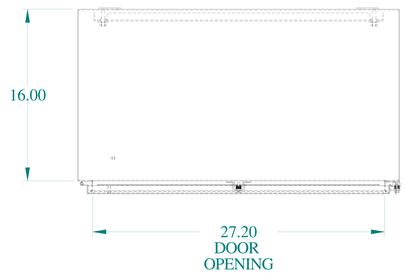


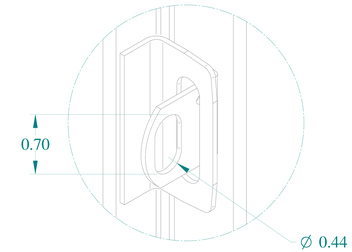


DETAIL Z

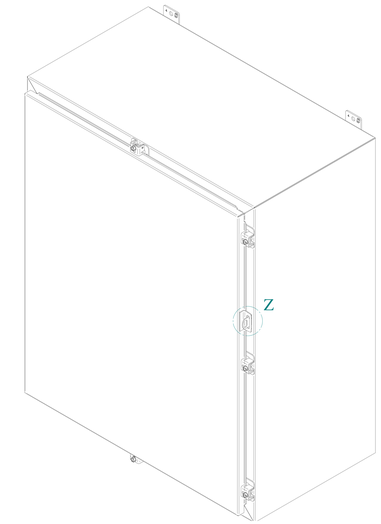


ISOMETRIC VIEWS

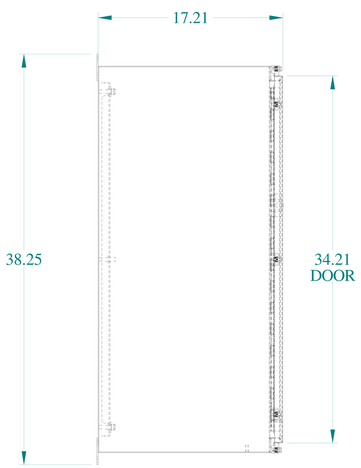


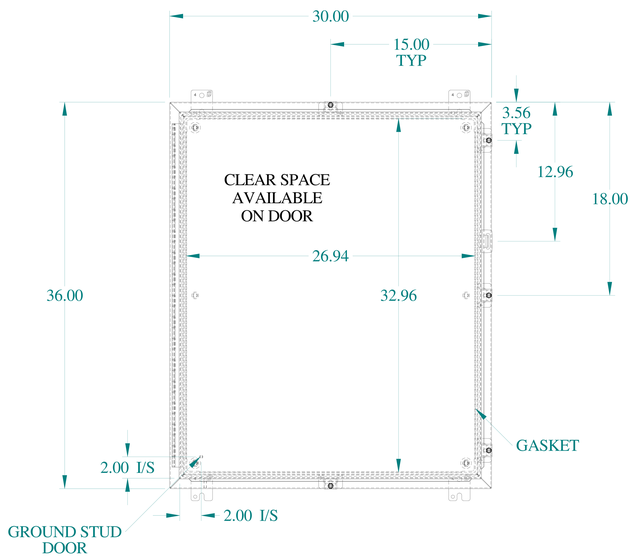


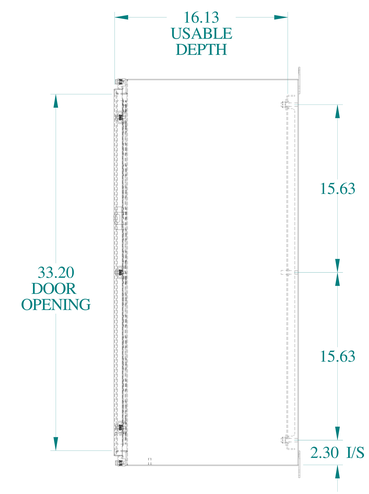


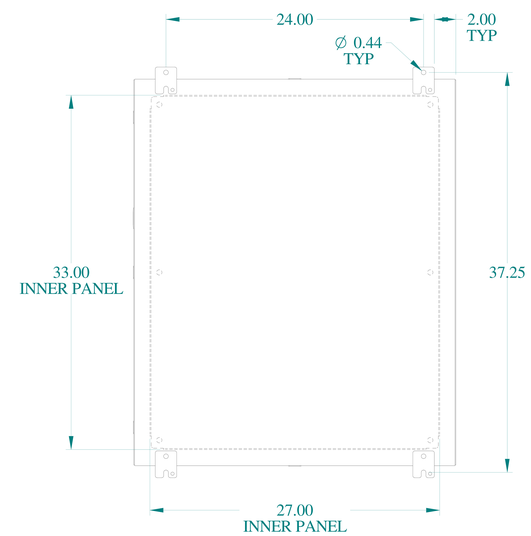


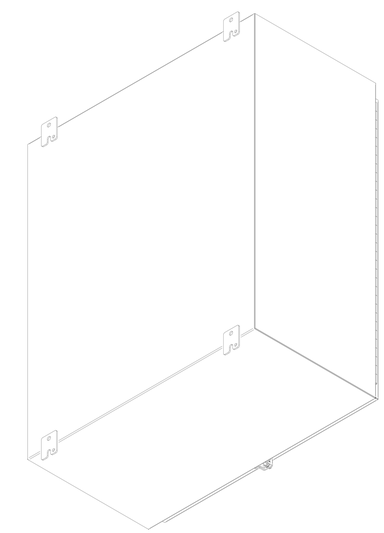

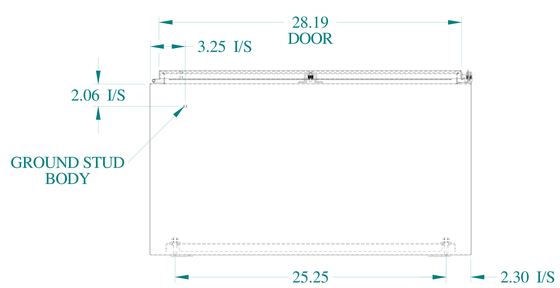


HAMMOND MANUFACTURING®

www.hammondmfg.com

Data subject to change without notice.

| | |
|---|---|
| Part # : 1418N4SSM16 | Date : Nov. 27, 2018 |

Link: www.hammfg.com/1418N4SSM16