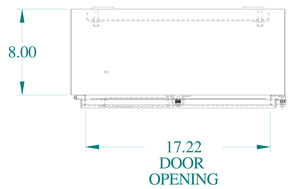

TOP VIEW

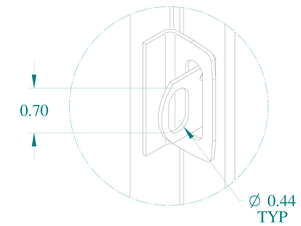

DETAIL Z

ISOMETRIC VIEWS

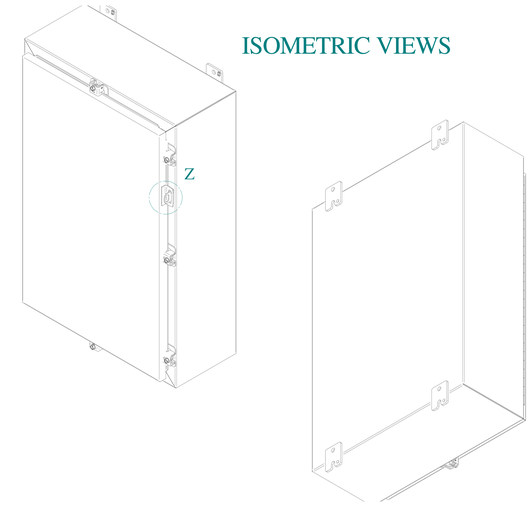

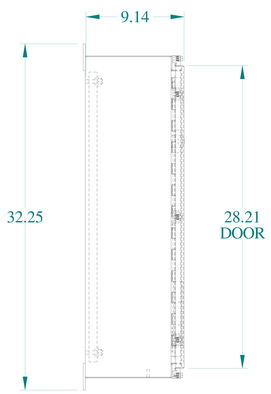

SIDE VIEW

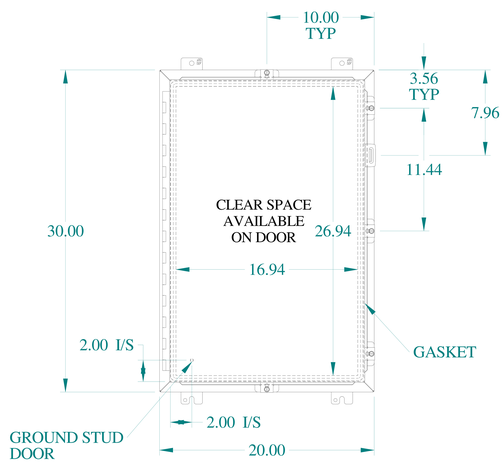

FRONT VIEW

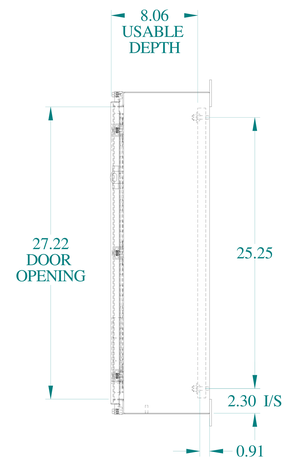

SIDE VIEW

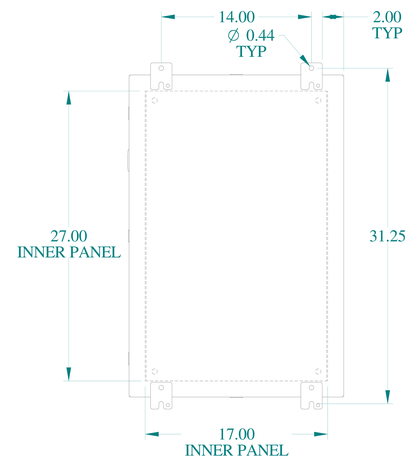

BACK VIEW

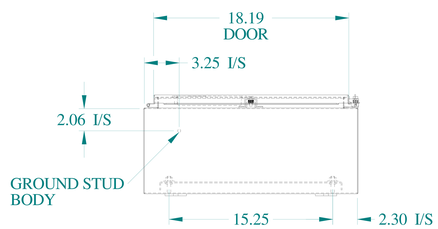

BOTTOM VIEW

HAMMOND MANUFACTURING®

www.hammondmfg.com

Data subject to change without notice.

Part # : 1418N4F8	Date : Oct. 17, 2018

Link: www.hammfg.com/1418N4F8