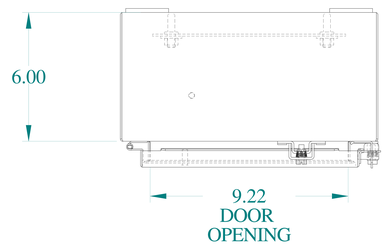


TOP VIEW

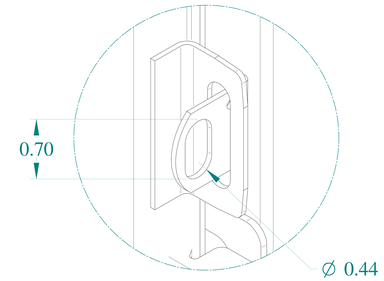


DETAIL Z

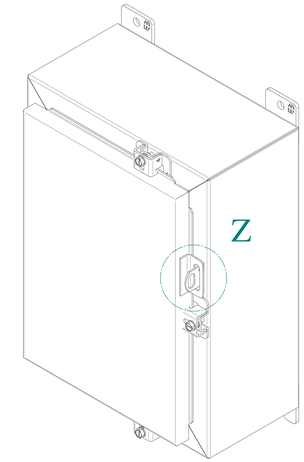


ISOMETRIC VIEWS

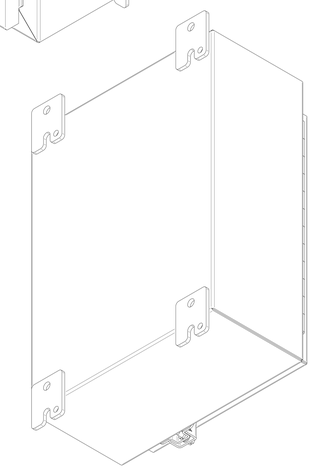

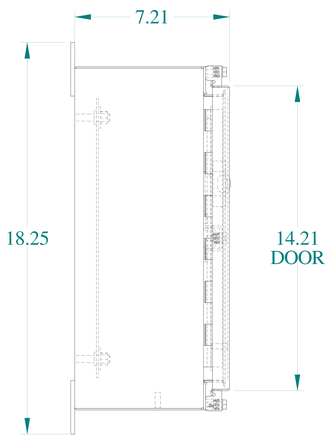


SIDE VIEW

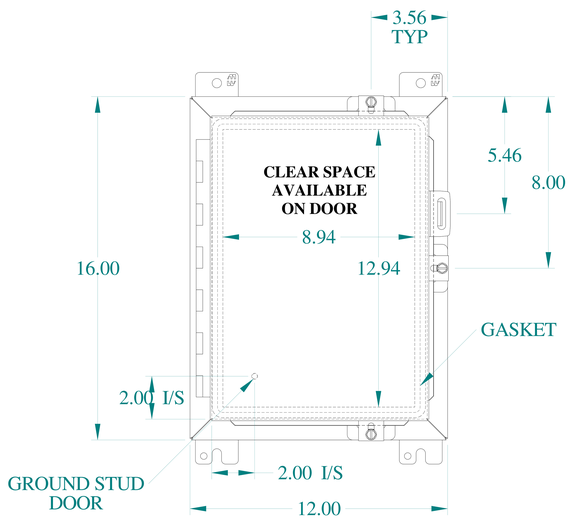


FRONT VIEW

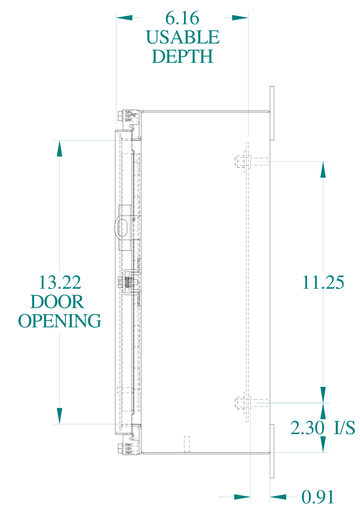


SIDE VIEW

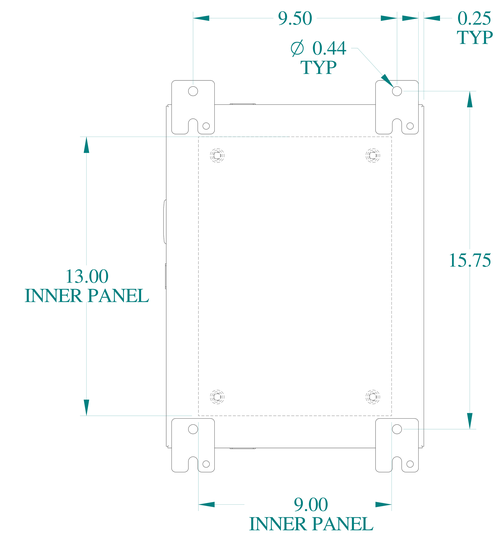


BACK VIEW

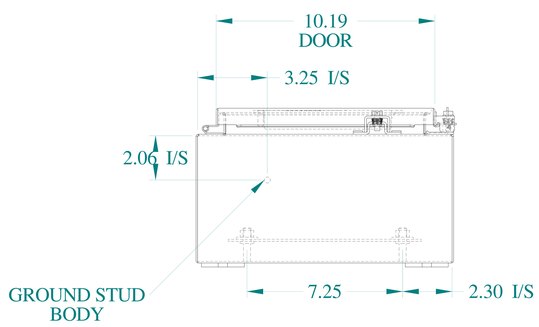


BOTTOM VIEW

HAMMOND MANUFACTURING®

www.hammondmfg.com

Data subject to change without notice.

| | |
|---|---|
| Part # : 1418N4B6 | Date : Oct. 17, 2018 |

Link: www.hammfg.com/1418N4B6