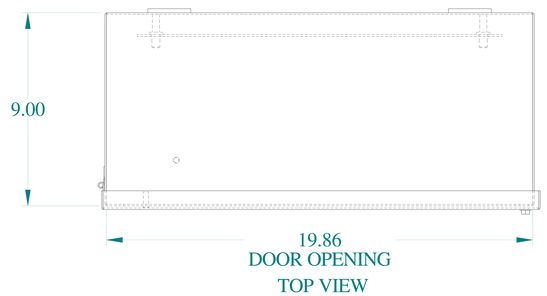

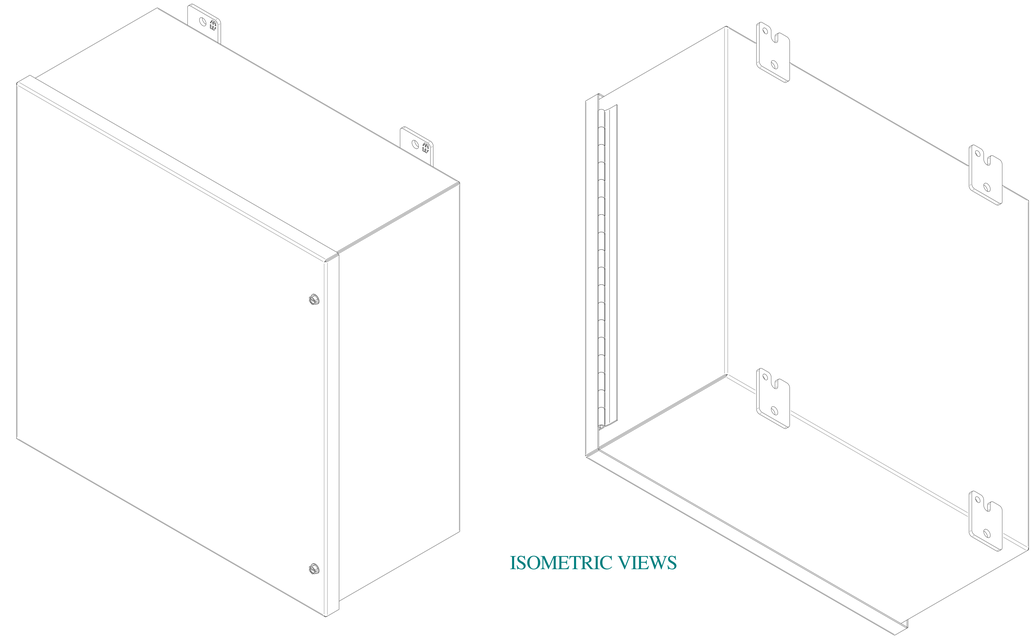

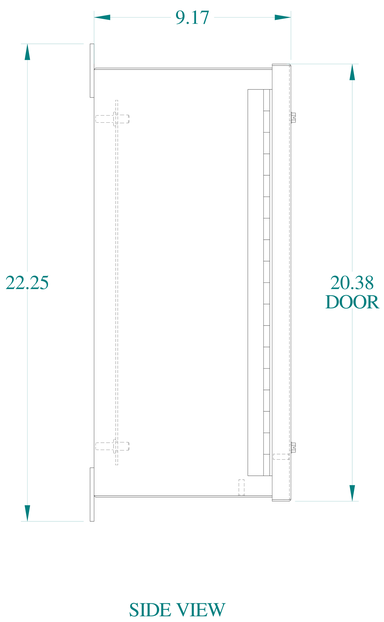

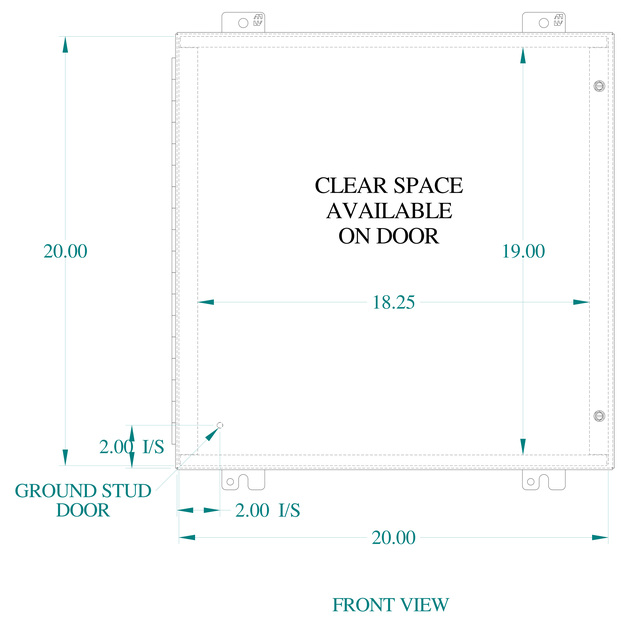

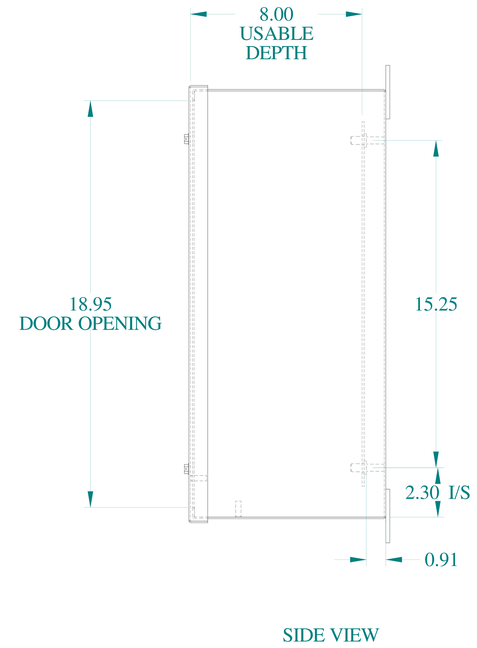

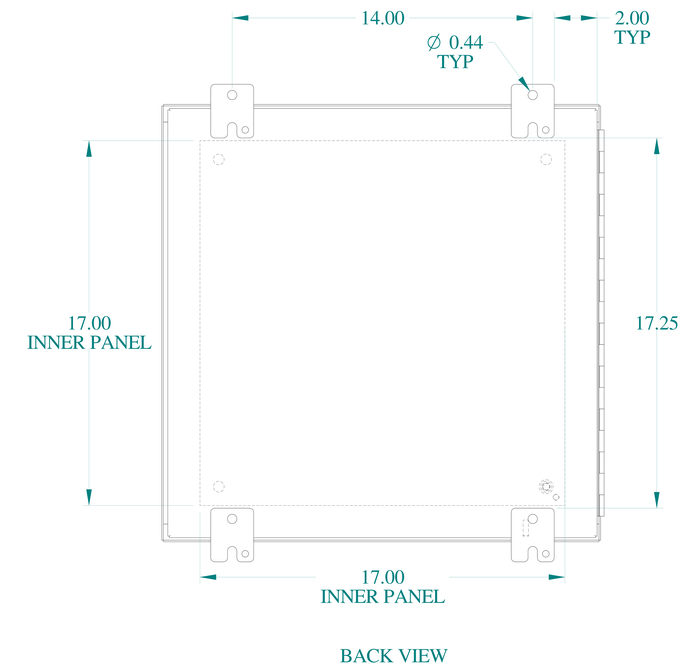

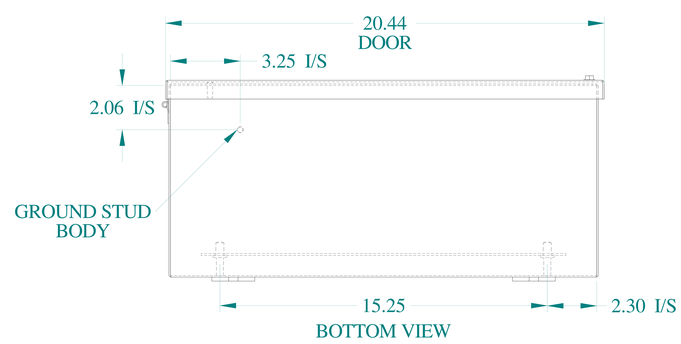

HAMMOND MANUFACTURING®

www.hammondmfg.com

Data subject to change without notice.

Part # : 1418JD9	Date : Oct. 24, 2018

Link: www.hammfg.com/1418JD9