INSTRUCTIONS

CAGE SOLAR BOLLARD

4552.3030

Please read the instructions before commencing installation and retain for future reference.

SPECIFICATIONS:

- **Fitting:** Body made in aluminium with clear polycarbonate diffuser. Includes PIR sensor.
- **Lamp types:** 3.5W / DC3.7V / LED 3000K
- **Protection against electric shock:** CLASS Ⅲ. Does not require earth connection.
- **Ingress Protection:** IP54. Protection against the entry of dust and water splashes
- **Driver:** not required.
- **Quality/Corrosive rating:** Suitable for outdoor / indoor domestic and commercial use.
- **Ambient temperature range:** 0ºC to +60ºC.
- **Battery type:** lithium
- **Charge time:** 6-8hrs
- **Working time:** Full light (up to 4hrs), Micro-light (up to 30hrs).

INSTALLATION INSTRUCTIONS:

Installation 1

- Fix the plastic spike to the bottom of the fitting. Then insert into the soil, put the product in the position with enough sunshine.

Touch the switch for 3 sec/s after installing,
When the blue light is on the fitting is lit up completely and lasts for 50s (Fig. 1-2) thereafter normal use continues.

Installation 2

- Remove the mounting plate. Drill four holes in the cement ground and insert the expansion anchors.
  Install the base plate to the cement surface with the screws provided. (Fig.1)
- Secure the body with the screws provided. Put the body to the mounting plate. Press the switch for 3 sec/s after installing. Switch button changes to blue. (Fig. 2)

WARNING: Ensure all items and screws are secure and fitted correctly.

CAGE SOLAR BOLLARD

Installation 1

Fig.1

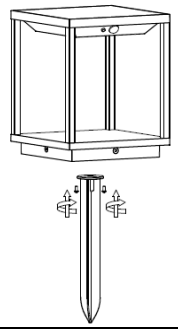

Fig.2

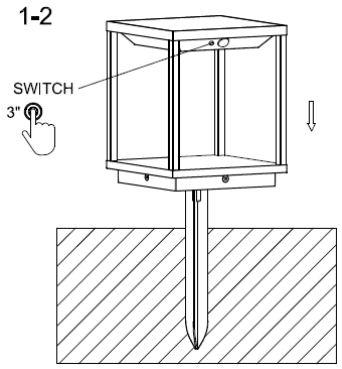

Installation 2

Fig.1

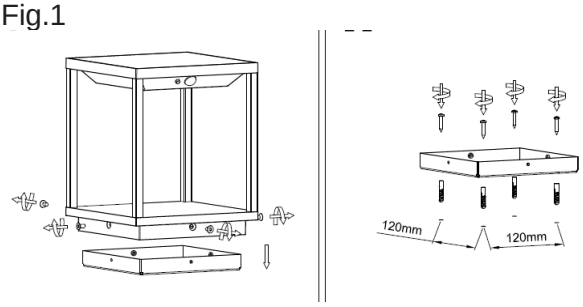

Fig.2

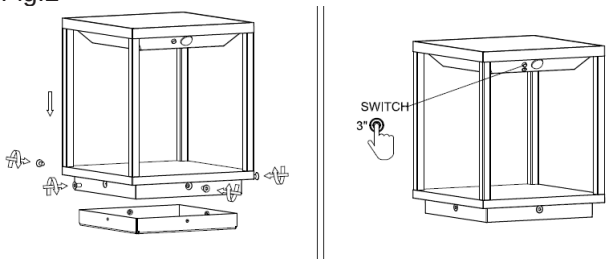

Spazio Lighting (Pty) LTD.
JOHANNESBURG OFFICE: 52 Andries Street | Wynberg/Sandton
CAPE TOWN OFFICE: 36 Milner Street | Paarden Eiland
DURBAN OFFICE: 31 Solstice Road | Umhlanga Ridge
011 555 5555 (Central Switchboard) | **info@spazio.co.za**