Wooden Camera®

UNIFIED BASEPLATE ARRI ALEXA MINI / MINI LF

INSTALLATION GUIDE

© Wooden Camera, Inc. 2011–2019

ADDITIONAL ITEMS

Unified Bridgeplate (19mm)
$499 SKU:223100

2060/2575/120EX Dovetail (12")
$399 SKU:143600

Unified Bridgeplate (15mm Studio)
$499 SKU:223200

Safety Dovetail (12")
$260 SKU:151200

INSTALLATION

4x M4x8mm socket cap

1. Attach Lower Dovetail to Bridgeplate or Tripod Plate using appropriate screws with Lens Arrows facing forward.
2. Select Baseplate Core, drop Core onto Dovetail, slide forward and tighten Thumbscrew.

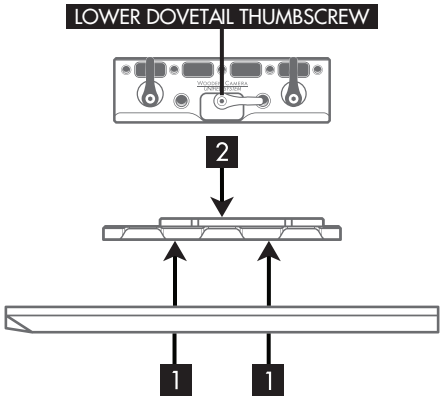

3. Locate M4 Holes on Top Dovetail and Camera Bottom as shown below.

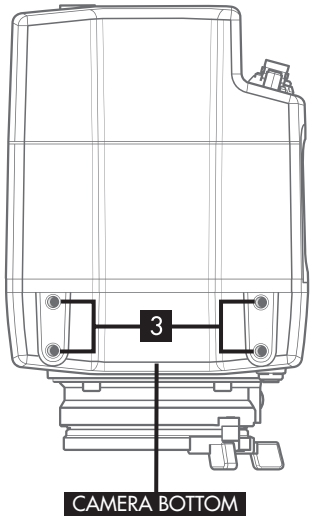

4. Select M4 Screws, align, and tighten Top Dovetail to Camera.

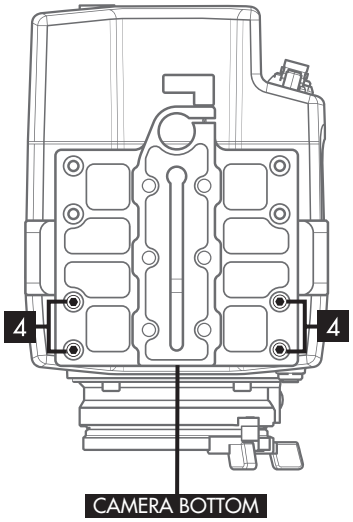
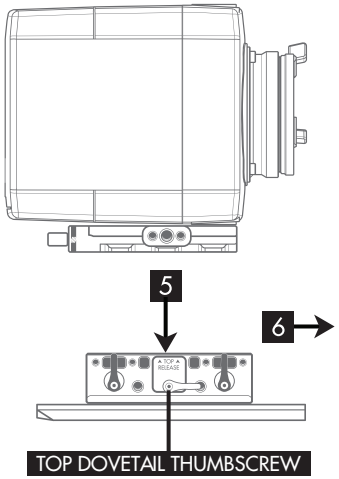
5. With Camera Lens facing forward, lower Camera and Top Dovetail into Core.
6. Slide Camera forward and tighten Top Dovetail Thumbscrew.