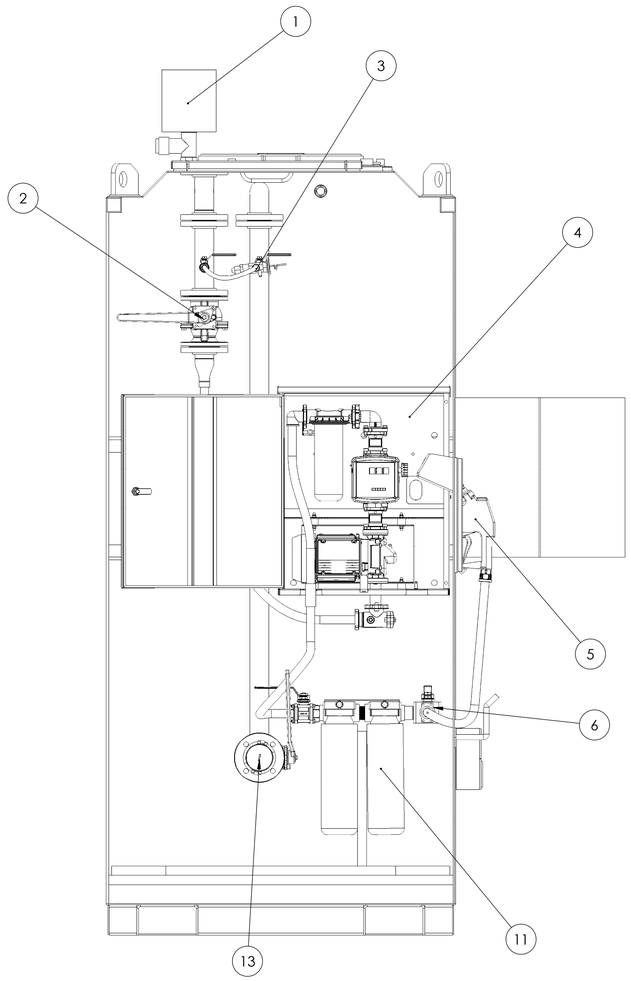

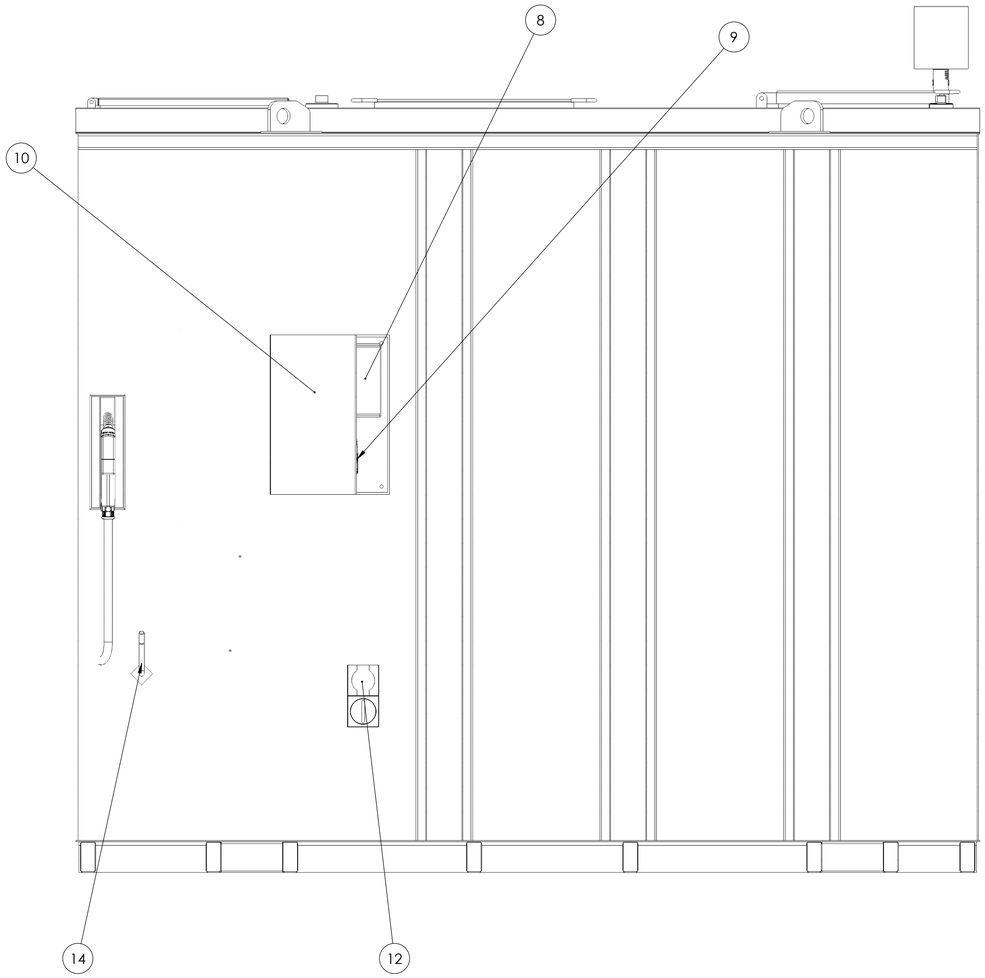

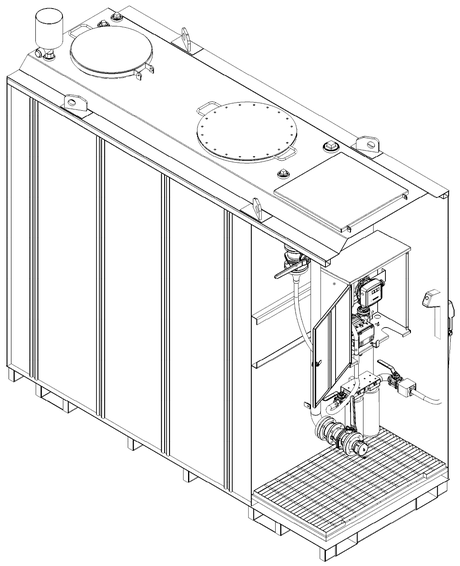

ITEM NO.	ITEM DESCRIPTION
1	FILTER DONALDSON TANK BREATHER TRAP DFF0078
2	2" FIRE SAFE BALL VALVE
3	THERMAL RELIEF LINE
4	PUMP 240V AC PIUSI 85LPM ST BOX COMPRISING LOCKABLE CABINET, E120 PUMP, WATER FILTER, K33 METER - F00365050
5	PIUSI A120 AUTO NOZZLE
6	PULSE METER PIUSI K600/4 000473000
7	iFUEL® POLY NOZZLE BOOT NOZZLE HOLSTER
8	FMS iFUEL LITE ONLINE
9	GAUGE PIUSI 240V OCIO F0075510D
10	WEATHERPROOF BOX
11	FILTER DONALDSON CLEAN AND DRY DIESEL FILTRATION P506073
12	POWER CONNECTION POINT
13	ROAD TANKER UNLOADING
14	HOSE HOOK

iFUEL® REFUELLING SOLUTIONS

REV.	DATE	REVISION DESCRIPTION	DES. CHK.	APPROVED	REV.	DATE	REVISION DESCRIPTION	DES. CHK.	APPROVED	REFERENCE DRAWING No.	REFERENCE DRAWINGS

All dimensions are in mm unless specified otherwise

Drawn to AS1100.101-1992

MATERIAL:

WEIGHT: kg

PAGE: 1 OF 1

PRODUCED BY	DESIGNED BY	DRAWN BY Jason L
PROJECT NO --	CHECK DESIGN Ivo A	CHECK DRAWING
CONTRACT NO PIE44146	LEAD ENGINEER Jason L	APPROVAL DATE 23/11/2018
DRAWING SIZE A3	AREA PROJECT ENGINEER	ENGINEERING MANAGER
PLOT SCALE --	PROJECT MANAGER --	APPROVAL DATE --
CAD FILE NAME PIE44146-GOIND-01	CLIENT GO IND	APPROVAL DATE --

CEA STORE-5500 fitted with Donaldson DFF0078 Tank Breather / Piusi ST Box F00365050 / Donaldson Clean and Dry Filter Kit P506073 / Piusi K600/4 Pulse Meter / iFUEL® Lite Online FMS and Piusi OCIO ATG

THIRD ANGLE PROJECTION

SCALE

DRAWING NUMBER PIE44146-GOIND-STBOX-01

REV.