FLAT SAWS

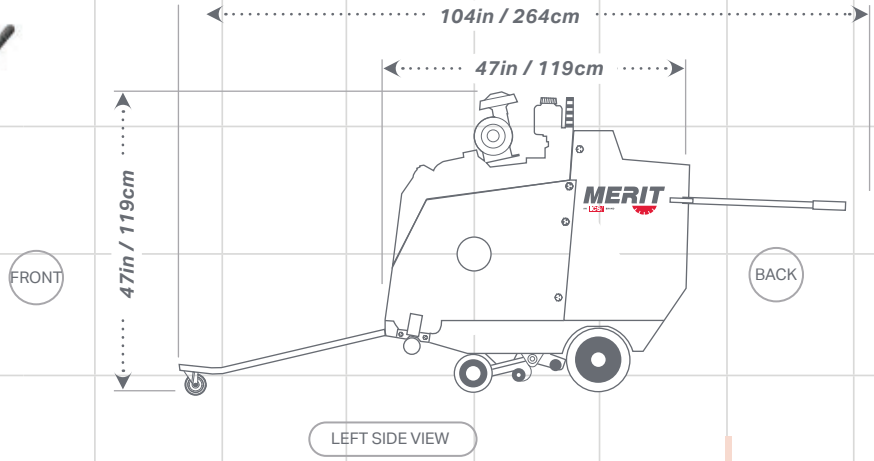

M400-30E - ELECTRIC POWER

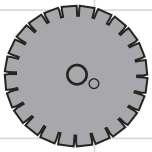

14in - 36in
35cm - 91cm

16in/41cm Max Cut

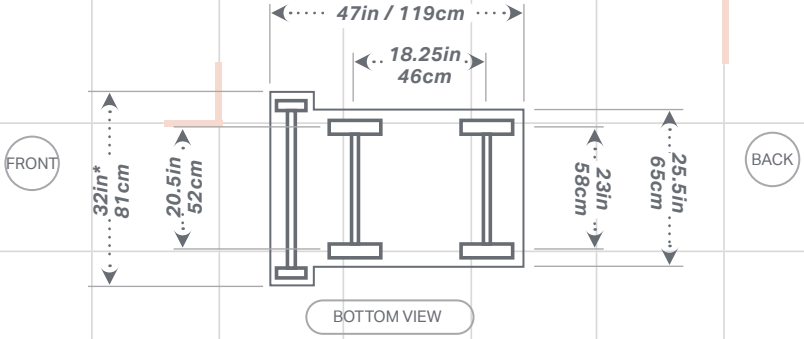

*32in / 82cm Standard
30.5in / 77.5cm QD w/components
28.375in / 72cm QD (Flush) w/components

SPECIFICATIONS

Raise & Lower Control	Button or standard
Air Filter	N/A
Blade Mounting	Left and right
Blade Shaft Drive	1in / 2.5cm with 4in / 10cm arbors
Approx. Weight	1100lbs. / 499kg.
Drive Speed	0-240 FPM
Depth Control	Mechanical
Arbor Size	1in / 2.5cm
Engine Manufacturer	Baldor
Voltage	480V 3-phase

BLADE GUARD IN	BLADE GUARD CM
14 x 2	35.5 x 5
18 x 2	46 x 5
20 x 2	50 x 5
24 x 2	61 x 5
26 x 2	66 x 5
30 x 3	76 x 7
32 x 3	81 x 7
36 x 3	91 x 7

400 SERIES - 30HP - ELECTRIC - FRONT PIVOT - 4 SPEED	
M400-30E-F4-1110	M400, 30HP, ELECTRIC, FRONT PIVOT, 4 SPEED, STANDARD CONTROL, STANDARD BLADE MOUNT, LIGHT KIT
M400-30E-F4-2110	M400, 30HP, ELECTRIC, FRONT PIVOT, 4 SPEED, BUTTON CONTROL, STANDARD BLADE MOUNT, LIGHT KIT
M400-30E-F4-1210	M400, 30HP, ELECTRIC, FRONT PIVOT, 4 SPEED, STANDARD CONTROL, QUICK DISCONNECT BLADE MOUNT, LIGHT KIT
M400-30E-F4-2210	M400, 30HP, ELECTRIC, FRONT PIVOT, 4 SPEED, BUTTON CONTROL, QUICK DISCONNECT BLADE MOUNT, LIGHT KIT
400 SERIES - 30HP - ELECTRIC - REAR PIVOT - 4 SPEED	
M400-30E-R4-1110	M400, 30HP, ELECTRIC, REAR PIVOT, 4 SPEED, STANDARD CONTROL, STANDARD BLADE MOUNT, LIGHT KIT
M400-30E-R4-2110	M400, 30HP, ELECTRIC, REAR PIVOT, 4 SPEED, BUTTON CONTROL, STANDARD BLADE MOUNT, LIGHT KIT
M400-30E-R4-1210	M400, 30HP, ELECTRIC, REAR PIVOT, 4 SPEED, STANDARD CONTROL, QUICK DISCONNECT BLADE MOUNT, LIGHT KIT
M400-30E-R4-2210	M400, 30HP, ELECTRIC, REAR PIVOT, 4 SPEED, BUTTON CONTROL, QUICK DISCONNECT BLADE MOUNT, LIGHT KIT