COMPCOOLER

Personal Thermal Regulation Technology
To Keep Your Body Cool and Comfortable in Harsh Conditions!

On line Shopping

www.compcooler.shop

simonsun@compcooler.com

Designed in USA
Made in China

Vehicle Mounted Thermal Chiller System

Model: COMP-VTCS-24400

Operation Manual

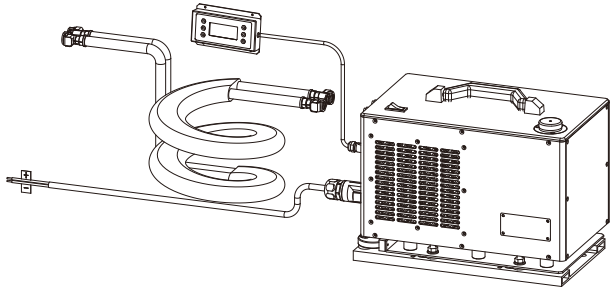

COMPCOOLER

PERSONAL THERMAL TECHNOLOGY

COMPCOOLER

Personal Thermal Technology

Personal Liquid Circulation Cooling System

- Liquid Cooling Garment
- ICE Water Cooling Unit
- Mini Chiller Cooling Unit

Reduce body core temperature and decrease the incidence of thermal stress while increasing comfort, safety, focus and endurance.

Contents

System Description

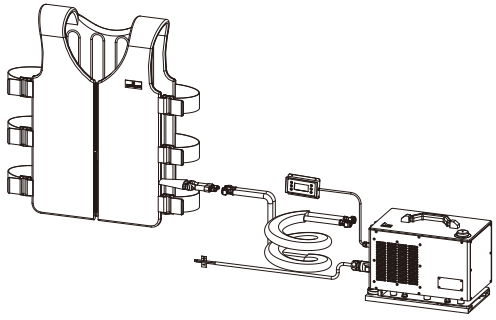

The Compcooler Vehicle Mounted Thermal Chiller System (VTCS) is a rugged vehicle-based refrigeration system specifically designed to keep vehicle drivers and aircraft pilots cool, or warm.

VTCS uses a micro chiller unit to cool or wam liquid in a reservoir. A pump circulates the liquid to a tubing-lined garment and/or cooling pad. Thermal transfer takes place with the User's body and the liquid returns back to the chiller unit to be cooled or warmed again. This process cotinues in a closed loop as long as the system is powered 'On'.

VTCS delivers 200W-400W cooling capacity and 250W heating capacity. It is powered by either the vehicle's DC 24-28V power, or a 110-220V AC power adapter. Temperature control is -5°C to 30°C (23°F to 86°F) with an accuracy of +/-1°C (2°F) for cold water, and 31°C to 50°C (88°F to 122°F) with an accuracy of +/-1°C (2°F) for warm water.

The system is programmable and will automatically operate at the user's preferred temperature set point. The set point can be adjusted using the supplied remote controller. The User may pre-cool or pre-warm the unit to achieve the preferred liquid temperature.

Component List

Item	Part number	Description	Quantity
1	COMP-VTCS-24400	Micro Refrigeration Chiller Unit 24V 350W Cooling and 250W Heating	1
		Remote Controller, 1.5m (5ft.) corded	1
		Power Cord, 1.5m (5ft.)	1
		Quick Release Base	1
2	COMP-MLCV	Mesh Liquid Cooling Vest	1
3	COMP-ET2M-2M2F	Extension Tubing, 2m (6ft.) 2 Male and 2 Female	1
4		Operation Manual	1

Component Description

1. Mesh Liquid Cooling Vest,
   Part no. COMP-MLCV
2. Extension Tubing
   Part no. COMP-ET2M-2M2F
3. Chiller Unit
   Part no. COMP-VTCS-24400
4. Remote Controller
   Part no. COMP-VTCS-RCLCD
5. Power cord
   Part no. COMP-VTCS-PC5FT
6. Quick release base
   Part no. COMP-VTCS-QB

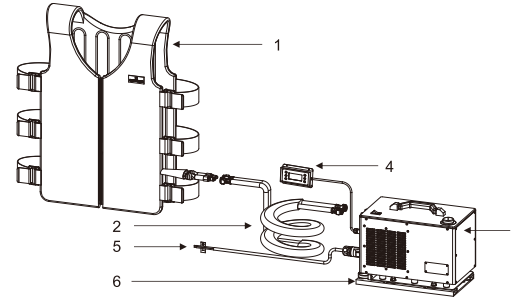

Optional Components

Item	Part Number	Description
1	COMP-LCG-FBFR	Full body cooling garment (Fire Resistant)
2	COMP-PA-11024	Power adapter 110-220V AC to 24V DC 450W

Dimensions, Chiller Unit

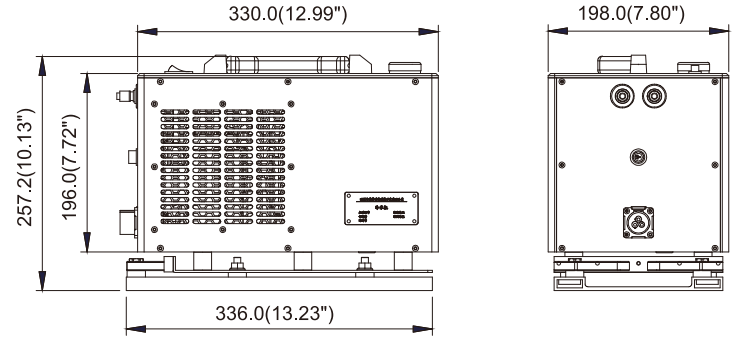

Chiller Unit Callouts

1. Micro refrigeration compressor
2. Condenser
3. Reservoir
4. Filling cap
5. Draining cap
6. Water pump
7. Water Inlet
8. Water outlet
9. Control board
10. Drive board
11. Heater
12. Power connector
13. Controller connector
14. Power switch
15. Condenser Fans
16. Electromagnetic Shielding

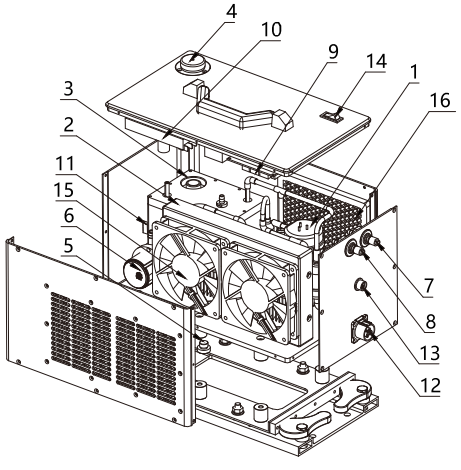

Chiller Control Diagram

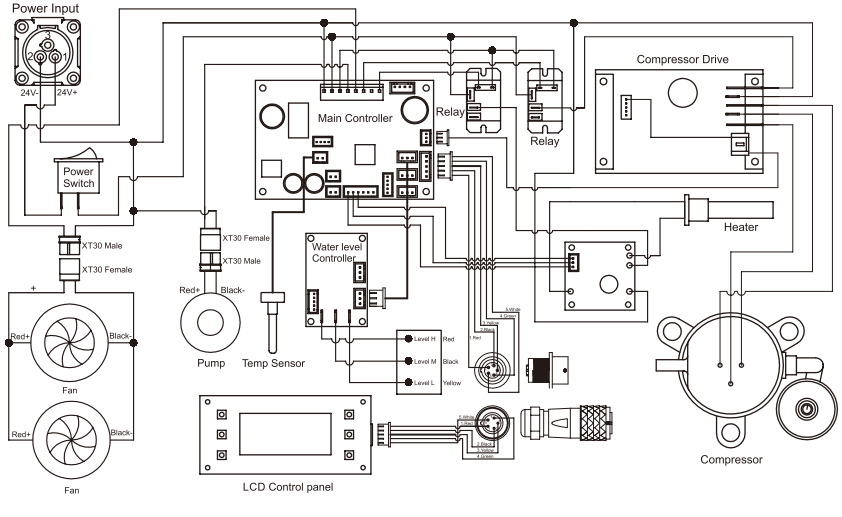

Chiller Unit Technical Datasheet

Cooling Capacity (Ambient Temp. 40℃)		W	350
Cooling Capacity (Ambient Temp. 104℉)		Btu	1364
Max Cooling Capacity		W	500
Heating Capacity (Ambient Temp 0℃)		W	250
Power Supply		V DC	24-28
Operation Current		A	5-12
Max Current		A	18
Max Power Consumption (Cooling)		W	400
Max Power Consumption (Heating)		W	300
Refrigerant	Type		R134a
Compressor Speed Setting	Manual	RPM	2000-6000
Temp Control (Cooling)		°C (°F)	-5 to 30 (23 to 86)
Temp Control (Heating)		°C (°F)	31 to 50 (88 to 122)
Coolant	Anti-freeze liquid		Yes
Circulation Tubing	ID	inch	1/4
Miniature Rotary Compressor	Qty	PC	1
	Voltage	V DC	24
	Discharge	CC	2.0
	Weight	G (Lbs.)	900 (2)
Heater	Voltage	V DC	24
Fan	Qty	PC	2
	Voltage	V DC	24
	Air Flow	CFM	110
Pump	Voltage	V DC	24
	Water flow	L/Min	5
	Lift	M	5
Power Connector	3 pins Aero connector		yes
Controller Connector	5 pins Aero connector		yes
Operation Ambient	Max	°C (°F)	-10 to 65 (14 to 150)
Storage Temp		°C (°F)	-20 to 70 (-4 to 158)
Noise	Max	dBA	68
Color	Black and silver		yes
Dimension	L x W x H	MM	336x198x257
		INCH	13.23x7.80x10.13
Weight		KGS	8.5
		LBS	18.7

Liquid Circulation Vest

1. Outer Fabric; Soft stretch mesh
2. Liner; Soft stretch mesh
3. Cooling Channel; Silicone micro-tubing
4. Front zipper
5. Adjustable tabs
6. Aluminum manifold
7. Male quick-connect fittings

Size: XS/S, M/L, XL/2XL, 3XL/4XL

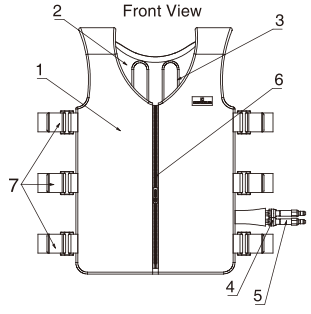

Feature	XS/S	M/L	XL/2XL	3XL/4XL
Chest	84cm/33.1”	100cm/39.4”	108cm/42.5”	123cm/49.6”
Length	64cm/25.2”	68cm/26.8”	70cm/27.6”	73cm/28.8”

Optional Power Adapter

Part no. COMP-PA-11024
Power: 450W
DC Connector: Aero fitting
AC connector: US Style (EU, AU, JP)

Cooling Capacity Performance Curves

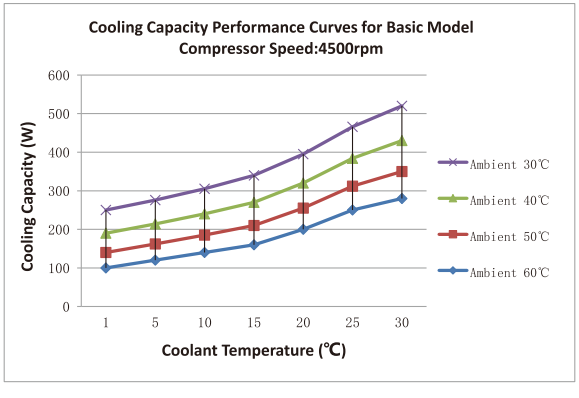

Power Consumption Curves (Compressor Speed)

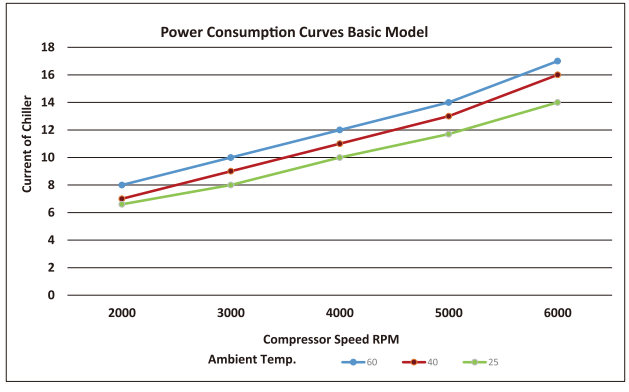

System Preparation

1. **Installation:** Install the quick release base on a flat surface and in a well-ventilated area using the included hardware and the hole pattern diagram at right. The fresh air inlet and dual fan outlets serve to cool the chiller unit, thus allowing it to operate at maximum performance (reference diagram below). Therefore, allow ample clearance around these features.

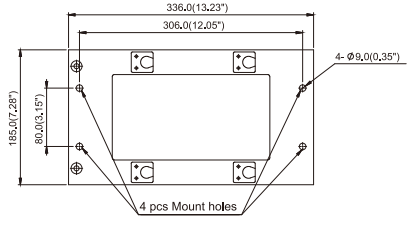

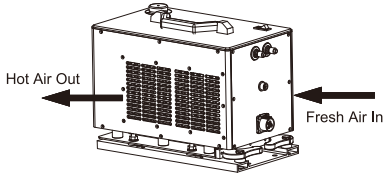

Do not block hot air outlet.

2. **Power Connection**: One power cord is provided with the refrigeration unit for connection to 24V DC vehicle power. Voltage range is 24V to 28V. Reference diagram below for location of power connection point.

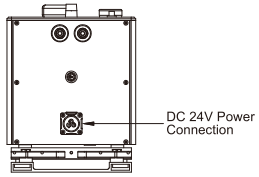

DO NOT connect the chiller with AC power directly. A power adapter is required for AC power operation.

3. **Remote controller connection;** Connect the remote controller to the chiller unit using the 5-pin Aero port.

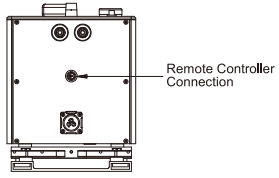

This is the connection port for the remote controller only. This is not a power input.

4. **Connect Extension Tubing**; VTCS comes standard with one set of extension tubes which tethers the VTCS chiller unit to the cooling vest.

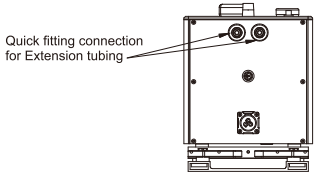

The extension tubes have quick-release fittings on both ends. Simply press the button on the fitting to release it. Conversely, when connecting the fitting, an audible 'click' ensures a good connection.

While these fittings are designed to mate with Compcooler's line of personal cooling devices and garments, they may be replaced by the User for compatibility with different garments or pads.

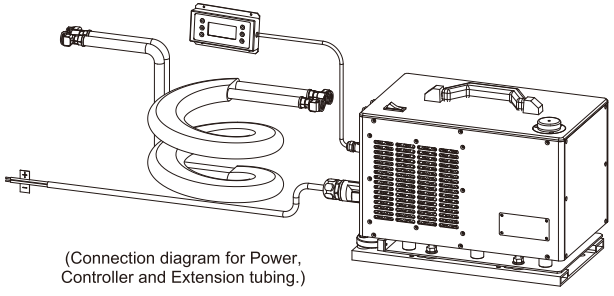

(Connection diagram for Power, Controller and Extension tubing.)

5. **Priming the System**; If using the VTCS for the first time, a two-step priming process is required. Before priming, it is imperative to understand the types of liquid to be used with the chiller.

The chiller can be set to cool liquid above, or below, the freezing point of water. Accordingly, the type of liquid to be used depends on the programmable temperature setting of the chiller. Please follow these guidelines for liquid preparation:

- Plain, clean water must be used for temperature settings above 1°C (33°).
- Anti-freeze liquid (such as 20% glycol with 80% clean water) must be used for temperature settings below 1°C (33°).

DO NOT use salt water, caustic, corrosive, or flammable fluids as these will damage the VTCS and void the warranty.

Priming Steps:

Step 1:
a. Remove the filler cap from the top of the chiller (reference diagram below).
b. Using a funnel, fill the reservoir with liquid until full.
c. Connect the cooling garment or cooling pad to the chiller using the extension tubes.
d. Connect the chiller to a power source using the supplied cable.
e. Press the 'Pump' button on the control panel to start circulation and allow it to run for 1 minute. This allows the liquid to circulate in a closed loop between the chiller reservoir and cooling garment and/or cooling pad.
f. Turn off the pump.

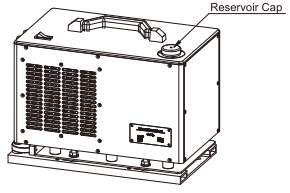

Step 2:
a. Using a funnel, fill the reservoir until full. This is required since some of the liquid has been used to fill the extension tubes, cooling garment and/or cooling pad during Step 1 of the priming process.
b. Replace the reservoir cap.

6. **Pre-Testing;** With the unit attached to vehicle or battery power, turn power switch on. Using the remote control (reference diagram below), ensure 'Pump" is off. Press "System" on to start refrigeration or heating and use the "Temp Up/Down" buttons to set the desired temperature. The temperature should get to set point in a few minutes and remain at that temperature in standby mode.

Temperature setting ranges are -5°C - 30°C (23°F - 86°F) to start cooling, and 31°C - 50°C (88°F - 122°F) to start heating.

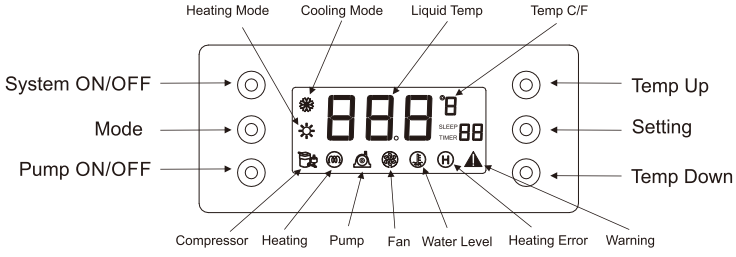

System Operation

1. **Garment or Pad Connection**; Connect the extension tubing to the chiller unit and liquid cooling garment and/or cooling pad. An audible 'click' ensures a good connection.

2. **Apply the Cooling Garment and/or Cooling Pad**; Once donned, create a snug fit. For optimal cooling performance, wear the vest against bare skin. For a cooling pad, place in desired location and secure in place if necessary.

3. **Start Refrigeration;** Turn the power switch on. Using the remote controller, ensure 'Pump" is off. Press "System" on to start refrigeration.

4. **Temperature Setting**: Use the 'Temp' up and down buttons on the remote controller to set the desired temperature for the circulation liquid. The liquid temperature will go down to the set point in minutes. Setting is completed when the large number stops blinking. A steady number shows the current liquid temperature. Icons show the status of the compressor, heater, and pump.

   The VTCS is designed with the following temperature control features:

   Cooling:
   - Maximum compressor speed when the liquid reaches a temperature 2°C (4°F) above the User setting; maintains the temperature setting under extreme User workloads and/or ambient conditions.
   - Moderate compressor speed when the liquid reaches a temperature 1°C (2°F) above the User setting; maintains the temperature setting under normal User workloads and/or ambient conditions.
   - Stops cooling when the liquid reaches a temperature 3°C (6°F) below User setting.
   - Restarts cooling when the liquid reaches a temperature 1°C (2°F) above User setting.

System Operation, Cont'd

Heating:
- Maximum (100%) heating when the liquid reaches a temperature 1°C (2°F) below the User setting; maintains the temperature setting under extreme User and/or ambient conditions.
- Moderate heating (10-90%) when the liquid reaches the User's temperature setting; maintains the temperature setting under normal User and/or ambient conditions.
- Stops heating when the liquid reaches a temperature 1°C (2°F) above User setting
- Restarts heating when the liquid reaches a temperature 1°C (2°F) below the User setting.

5. **Control pad:** User may mount the tethered LCD control pad in an ergonomic location that is proximate to the driver's seat using the four mounting holes in the pad frame (ref. diagram at right).

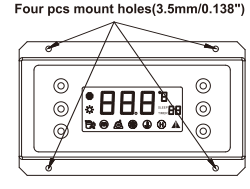

6. **Start Pump**: Press the 'Pump' button on the control pad to start or stop circulation. Ensure the extension tubing is connected in a closed loop between the chiller and garment and/or pad before circulation begins. Make sure no kinks exist in the extension tubes. Otherwise, flow and cooling performance will be impeded. If flow is impeded or disconnected at the garment and/or pad, the liquid will be diverted and flow through a check valve whereby circulation will remain in a closed loop between the chiller and extension tubes only (reference diagram below).

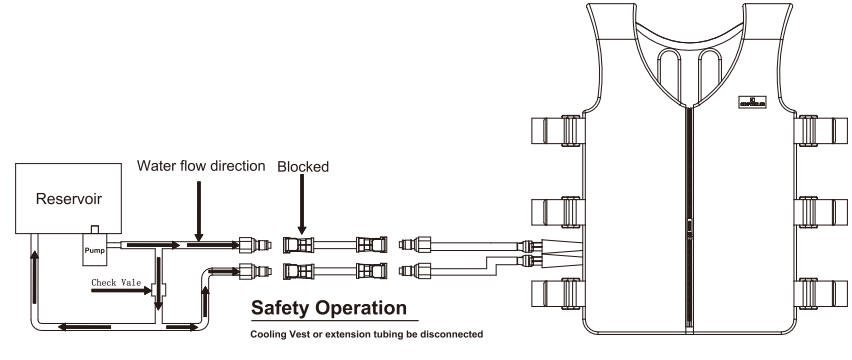

Maintenance

1. **Cleaning**; Several parts of the VTCS may require cleaning as follows:

   a. **Chiller Unit**; The protective metal housing of the chiller box may be cleaned with a damp cloth and alcohol-based cleaning solution.

   b. **Garment**; Machine washing with cold water on a gentle or delicate cycle is acceptable using a laundry bag. Hang drying is the only acceptable drying method. Do not use bleach, an iron or place the vest in a machine dryer.

   c. **Reservoir**; Remove the drain plug cap from the underside of the chiller and drain the liquid (ref. diagram at right for drain plug location). If the liquid contains anti-freeze, contain, and discard this liquid according to your local regulations. Replace the drain cap and remove the filler cap on the topside of the VTCS. Refill the reservoir with a solution of clean water, disinfectant and/or scale remover. Allow that to dwell for 10 minutes and drain again. Leave the drain cap off and allow the reservoir to dry completely. Replace the drain cap before next use.

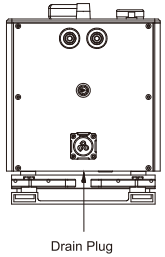

   d. **Condenser**; To keep the chiller at optimum cooling capacity, the condenser should be kept free of dust and dirt. To check if cleaning is necessary, open the side panel and remove the fans. If cleaning is required, use 50-100psi compressed air to clean the contamination.

   Note – always use protective eyewear when cleaning with compressed air.

2. **Charging Refrigerant**; (not recommend for uncertified operator)

   If the cooling capacity has been diminished due to lack of refrigerant, the VCHS will need to be recharged by a licensed refrigeration specialist using 150g of R134a refrigerant. The refrigerant charging port is also found behind this side panel.

3. **Heater replacement**

   Heating capacity can be adversely affected if unclean water is cycled for extended periods. It is best to maintain the VTCS by changing the water routinely. If the VTCS heating performance is permanently diminished due to misused with unclean water, the heater will need to be replaced. Replacement heaters can be purchased from Compcooler.

Storage

1. Disconnect the power cord.
2. Disconnect the extension tubing.
3. Empty and clean the reservoir by following the instructions under the Maintenance section 1.c.
4. Pack the unit for storage.
5. Restart: after long term storage the chiller reservoir should be flushed using a solution of clean water and 5% detergent. Follow Priming instruction number 5 under the section for System preparation.

Components Renewal

Open the side panels to replace the fans and pump if damaged, or to use the refrigerant charging port when refrigerant is low. The remote controller and heater can also be replaced if damaged.

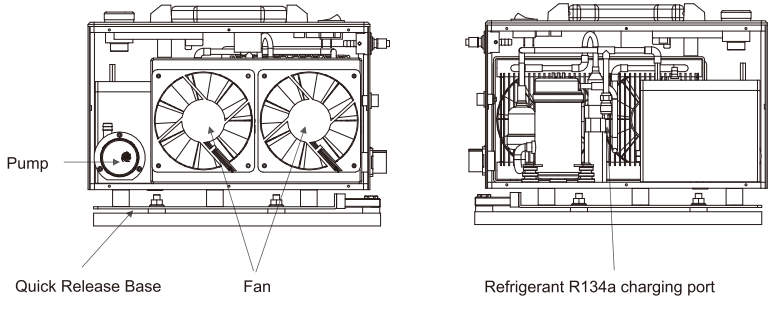

Cautions

1. Ensure power source is 24-28VDC before connecting chiller to vehicle power.
2. Ensure vehicle power is 400W or 20A before operation.
3. Repetitively cycling the chiller within a short period of time using the 'System On/Off' button will adversely affect the refrigeration system and power consumption.
4. Do not block the air inlet and outlet. It may lessen cooling performance or worse yet, cause the compressor to overheat.
5. Ensure cooling garments or cooling pads are connected to the chiller before starting the pump. Otherwise, leakage will occur.
6. Use anti-freeze liquid if temperature setting lower than 0℃ (reference System Preparation section, instruction #5.)
7. Do not operate the chiller close to a heat source or in ambient temperatures greater than 60℃ (150°F).
8. Do not operate the chiller in wet or submerged conditions.
9. Stop operation and disconnect the power if high vibration or abnormal noise is observed.
10. Always use protective eyewear when cleaning the chiller with compressed air.

Troubleshooting

Problem Description	Possible Cause	Solution
No cooling	Compressor locked, overheat protection, low voltage	See diagram under compressor issue page 15 to confirm fault type.
	No liquid circulation	Check if pump is turned on and cooling garment is connected, and no kinks or blockage exist.
	Power connection	Check connection of refrigeration unit to power source. Replace power cord if loose or damaged.
No heating	Check the temp setting	Temp setting needs to be 31°C to 50°C (88°F to 122°F).
Low cooling capacity	Low heat exchange rate for evaporator	Check liquid level inside reservoir. Replenish if low.
	Low refrigerant level	Check if air from condenser air outlet is hot. Air should be hot for normal operation. Recharge refrigerant R134a if need.
	Low voltage	Check unit input voltage (not the voltage of power supply). Operation voltage should greater than 24V DC.
No liquid flow	Pump is Off	Turn pump on.
	Problem with quick fitting connection between unit and garment	Check that quick fitting connection on extension tubes are connected properly and not blocked or broken.
	Pump blocked	Disassemble the pump from chiller unit and clean if blocked.
Remote controller is not working	Loose connection	Make sure there is a tight connection of controller plug to refrigeration unit.
	Controller LCD output is sporadic or unclear	Contact manufacturer for replacement if under warranty or purchase an extra remote controller.

Compressor Issue:

Compressor malfunctions can be analyzed by counting the number of LED flashes.

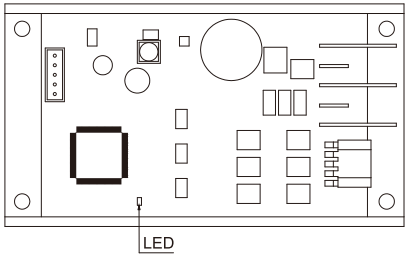

LED Flash Count	Type of Errors
1	Compressor locking or overloaded
2	Disconnection of compressor line or an error of sensing current
3	Short-circuit on motor parts or over-current
4	Abnormal DC voltage
5	Overheating of the controller

Safety

Warning: It is important to become thoroughly familiar with the operating characteristics of the Compcooler Units. It is the owner's responsibility to assure proper User training of the cooling system including component knowledge, system preparation, system operation and maintenance. Disregarding this warning can result in injury to the operator and severe mechanical damage to the unit.

Warranty

Compcooler warrants this product to be free from defects in workmanship and materials, under normal residential use and conditions, for a period of one (1) year from the date of shipment. Shipping and handling fees are to be paid for by the customer. The manufacturer agrees, at its option during the warranty period, to repair any defect in material or workmanship or to furnish a repaired or refurbished product of equal value in exchange without charge (except for fees for shipping, handling, packing, return postage, and insurance which will be incurred by the customer). Such repair or replacement is subject to verification of the defect or malfunction and proof of purchase as confirmed by showing the model number on original dated sales receipt.

Certifications

Certifications

CE, UL, FDA, FCC, RoHS, PSE

Quality System

Customer service:
simonsun@compcooler.com