COMPCOOLER

Personal Thermal Regulation Technology
To Keep Your Body Cool and Comfortable in Harsh Conditions!

On line Shopping

www.compcooler.shop

simonsun@compcooler.com

Designed in USA
Made in China

Racing Driver Cooling System
Basic Model

Model: COMP-RDCS-12200-BSC

Operation Manual

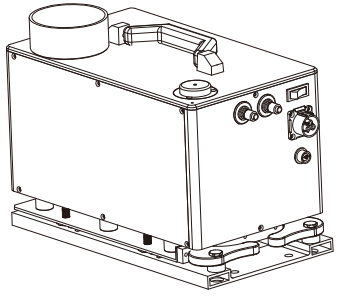

COMPCOOLER

PERSONAL THERMAL TECHNOLOGY

COMPCOOLER

Personal Thermal Technology

Personal Liquid Circulation Cooling System

- Liquid Cooling Garment
- ICE Water Cooling Unit
- Mini Chiller Cooling Unit

Reduce body core temperature and decrease the incidence of thermal stress while increasing comfort, safety, focus and endurance.

Contents

System Description..... 1
Components List..... 1
Component Description 2
Optional Components 2
Dimensions, Chiller Unit..... 2
Chiller Unit Callouts 3
Chiller Control Diagram..... 3
Chiller Unit Technical Data Sheet 4
Rechargeable Battery Specifications 5
Fire Resistant Liquid Cooling Shirt..... 5
Power Adapter 5
Cooling Capacity Performance Curves..... 6
Power Consumption Curves..... 6
System Preparation..... 7-9
System Operation..... 10
Maintenance..... 11
Storage 12
Components Renewal 12
Cautions..... 13
Fault Codes on Remote Controller..... 13
Troubleshooting..... 14
Safety..... 16
Warranty..... 16
Certifications..... 16

System Description

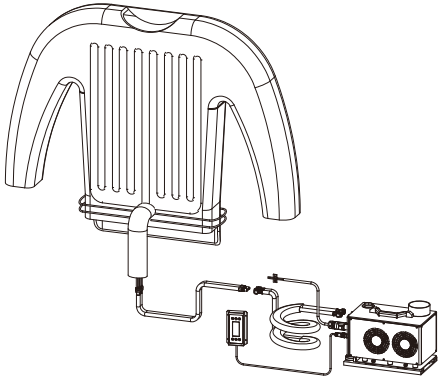

The Compcooler Racing Driver Cooling System (RDCS) is a rugged vehicle-based refrigeration system specifically designed to keep racecar drivers cool.

RDCS uses a micro chiller unit to cool liquid in a reservoir. A pump circulates the cold liquid to a tubing-lined garment and/or cooling pad. The driver's body heat is absorbed by the liquid and returned back to the chiller unit to be cooled again. This process cotinues in a closed loop as long as the system is powered 'On'.

RDCS is offered in two versions to deliver 200W - 400W cooling capacity. It is powered by either the vehicle's DC power, a rechargeable battery or a 110-220V AC power adapter. Temperature control is -5℃ to 30℃ (23℉ to 86℉) with an accuracy of +/-1℃ (2℉).

The system is programmable and will automatically operate at the user's preferred temperature set point. The set point can be adjusted using the supplied remote controller. The driver may pre-cool the unit to achieve the coldest liquid needed. A 3" air inlet with dual fan outlet increases the cooling performance of the chiller unit in hot conditions.

Component List

Item	Part number	Description	Quantity
1	COMP-RDCU-12200	Micro Refrigeration Chiller Unit 12V 200W	1
		Remote Controller, 1.5m (5ft.) corded	1
		Power Cord, 1.5m (5ft.)	1
		Quick Release Base	1
2	COMP-RCTS-FRLS	Fire Resistant Long Sleeve Cooling T-shirt	1
3	COMP-ET2M-2F2F	Extension Tubing, 2m (6ft.)	1
4		Operation Manual	1

Component Description

1. Fire Resistant Long Sleeve Cooling shirt, Part no. COMP-RCTS-FRLS
2. Extension Tubing Part no. COMP-ET2M-2F2F
3. Chiller Unit Part no. COMP-RDCU-12200
4. Remote Controller Part no. COMP-RDCU-RC88
5. Power cord Part no. COMP-RDCU-PC5FT
6. Quick release base Part no. COMP-RDCU-QB

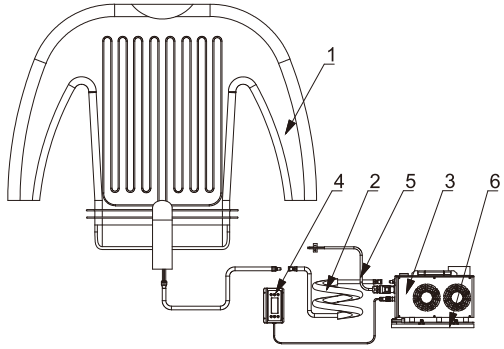

Optional Components

Item	Part Number	Description
1	COMP-LCG-FBFR	Full body cooling garment (Fire Resistant)
2	COMP-PA-11012	Power adapter 110-220V AC to 12V DC 280W
3	COMP-RB-1220	Rechargeable battery 12V 20A
4	COMP-FIT-2M	Fresh air inlet tubing, 2 meters

Dimensions, Chiller Unit

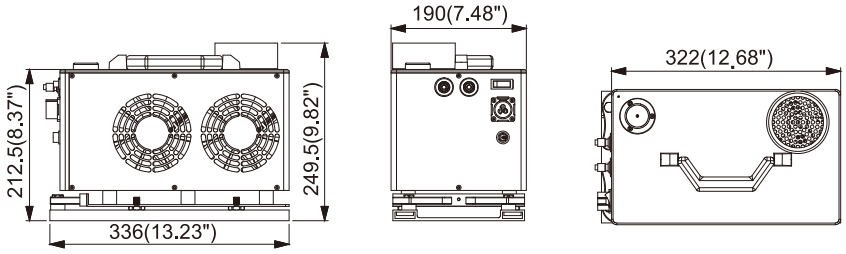

Chiller Unit Callouts

1. Micro refrigeration compressor
2. Condenser
3. Reservoir
4. Filling cap
5. Draining cap
6. Water pump
7. Water Inlet
8. Water outlet
9. Control board
10. Drive board
11. Power connector
12. Controller connector
13. Power switch
14. Air inlet
15. Air outlet

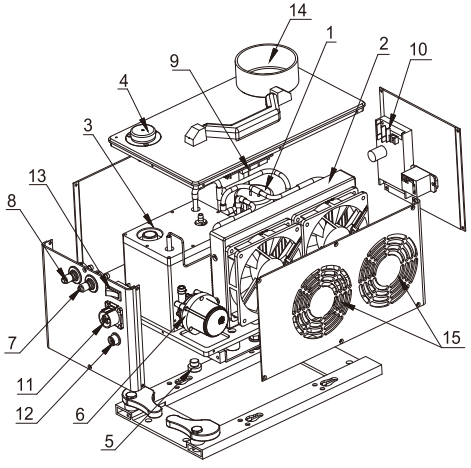

Chiller Control Diagram

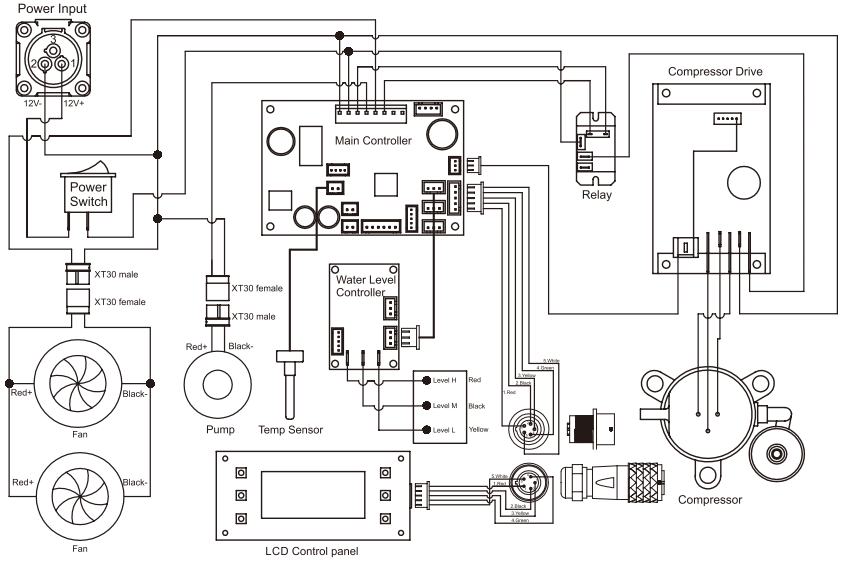

Chiller Unit Technical Datasheet

Cooling Capacity (Ambient Temp. 40℃)		W	200
Cooling Capacity (Ambient Temp. 104℉)		Btu	682
Max Cooling Capacity		W	400
Power Supply		V DC	12-16
Operation Current		A	6-17
Max Current		A	20
Max Power Consumption		W	250
Refrigerant	Type		R134a
Compressor Speed Setting	Manual	RPM	2000-6000
Temp Control		°C (°F)	-5 to 30 (23-86)
Coolant	Anti-freeze liquid		Yes
Circulation Tubing	ID	inch	1/4
Miniature Rotary Compressor	Qty	PC	1
	Voltage	V DC	12
	Discharge	CC	2.0
	Weight	G (Lbs.)	900 (2)
Fan	Qty	PC	2
	Voltage	V DC	12
	Air Flow	CFM	110
Pump	Voltage	V DC	12
	Water flow	L/Min	5
	Lift	M	5
Power Connector	3 pins Aero connector		yes
Controller Connector	5 pins Aero connector		yes
Operation Ambient	Max	°C (°F)	65 (150)
Storage Temp		°C (°F)	-20 to 70 (-4 to 158)
Noise	Max	dBA	70
Color	Black and silver		yes
Dimension	L x W x H	MM	336x190x249
		INCH	13.23x7.48x9.80
Weight		KGS	7
		LBS	15.4

Rechargeable Battery Specifications

Part no. COMP-RB1220
Rechargeable Battery: Li-Ion
Voltage: 12V DC
Operation Voltage: 11V to 16.8V
Capacity: 20A
Max Output: 40A @12V
Charging: 16.8V 110/220V AC adaptor
Battery Status: 3 lights show remaining capacity
Battery Case: Aluminum
Color: Black
Operation Time: 60-150 minutes

Fire Resistant Liquid Cooling Shirt; Long Sleeve

Part no. COMP-RCTS-FRLS
Fabric: Lenzing FR / Lycra
Color: white/black
Stretch rate: 10%
Cooling channel: Silicon 3.175mm (1/8")
Cooling Zones: Four zones
Manifold fitting: Aluminum, 1/4" to 1/8"
Connector:6.35mm (1/4") quick fitting
Dry weight: 0.5kg (1lb)
Size: XS/S, M/L, XL/2XL, 3XL/4XL

Feature	XS/S	M/L	XL/2XL	3XL/4XL
Chest	84cm/33.1"	100cm/39.4"	108cm/42.5"	123cm/49.6"
Length	64cm/25.2"	68cm/26.8"	70cm/27.6"	73cm/28.8"

Power Adapter

Part no. COMP-PA-11012
Power: 280W
DC Connector: Aero fitting
AC connector: US Style

Cooling Capacity Performance Curves

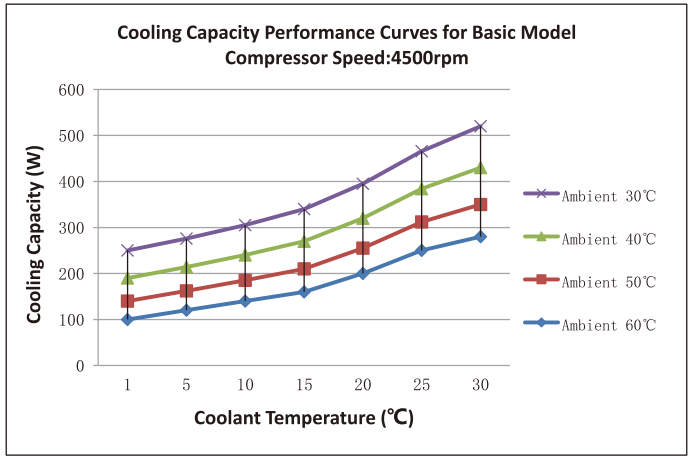

Power Consumption Curves (Compressor Speed)

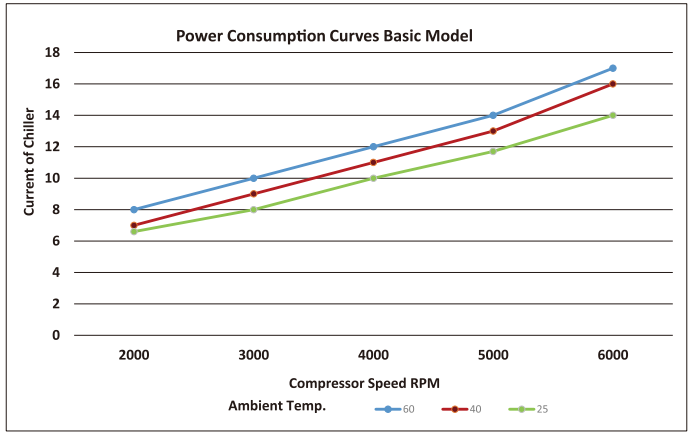

System Preparation

1. **Installation:** Install the quick release base on a flat surface and in a well-ventilated area using attached hardware. The fresh air inlet and dual fan outlets serve to cool the chiller unit, thus allowing it to operate at maximum performance (reference diagram below). Therefore, allow ample clearance around these features.

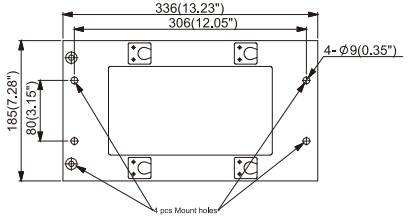

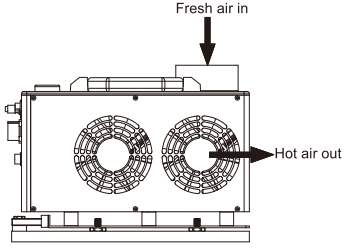

Do not block hot air outlet.

2. **Power Connection**: One power cord is provided with the refrigeration unit for connection to 12V DC vehicle power. Voltage range is 12V to 16V. Reference diagram below for location of power connection point.

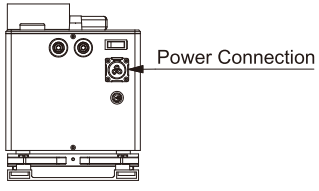

DO NOT plug the chiller with AC power directly. A power adapter is required for AC power operation.

3. **Remote controller connection;** Connect the remote controller to the chiller unit using the 5-pin Aero port.

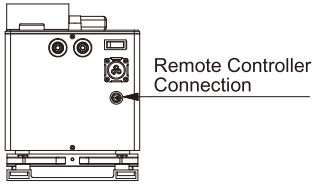

This is the connection port for the remote controller only. This is not a power input.

4. **Connect Extension Tubing**; RDCS comes standard with one set of extension tubes which tethers the RDCS chiller unit to the cooling vest.

The extension tubes have quick-release fittings on both ends. Simply press the button on the fitting to release it. Conversely, when connecting the fitting, an audible 'click' ensures a good connection.

While these fittings are designed to mate with Compcooler's line of personal cooling devices and garments, they may be replaced by the User for compatibility with different garments or pads.

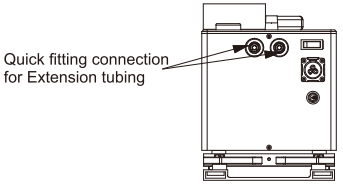

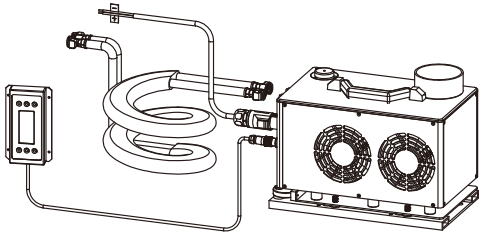

(Connection diagram for Power, Controller and Extension tubing.)

5. **Priming the System**; If using the RDCS for the first time, a two-step priming process is required. Before priming, it is imperative to understand the types of liquid to be used with the chiller.

The chiller can be set to cool liquid above, or below, the freezing point of water. Accordingly, the type of liquid to be used depends on the programmable temperature setting of the chiller. Please follow these guidelines for liquid preparation:

- Plain, clean water must be used for temperature settings above 1°C (33°).
- Anti-freeze liquid (such as 20% glycol with 80% clean water) must be used for temperature settings below 1°C (33°).

DO NOT use salt water, caustic, corrosive, or flammable fluids as these will damage the RDCS and void the warranty.

Priming Steps:

Step 1:

a. Remove the filler cap from the top of the chiller (reference diagram at right).
b. Using a funnel, fill the reservoir with liquid until full.
c. Connect the cooling garment or cooling pad to the chiller using the extension tubes.
d. Connect the chiller to a power source using the supplied cable.
e. Press the 'Pump' button on the control panel to start circulation and allow it to run for 1 minute. This allows the liquid to circulate in a closed loop between the chiller reservoir and cooling garment and/or cooling pad.
f. Turn off the pump.

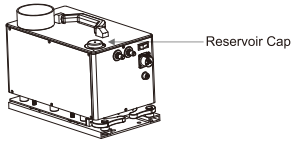

Step 2:

a. Using a funnel, fill the reservoir until full. This is required since some of the liquid has been used to fill the extension tubes, cooling garment and/or cooling pad during Step 1 of the priming process.
b. Replace the reservoir cap.

6. **Pre-Testing;** With the unit attached to vehicle or battery power, turn power switch on. Using the remote control, ensure 'Pump" is off. Press "System" on to start refrigeration and use the "Temp Up/Down" buttons to set the desired cooling temperature. The temperature should come down in a few minutes and remain at that temperature in standby mode.

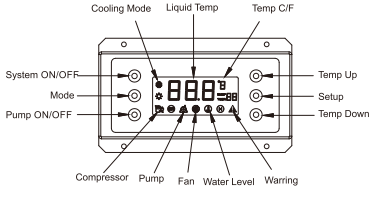

Note: This refrigeration unit has a temperature control feature that stops cooling when the liquid reaches a temperature 3℃ (6℉) below the User setting and begins cooling when the liquid reaches a temperature 1℃ (2℉) above the User setting.

7. **Fresh Air Supply;** User may assemble a flexible 3" fresh air tube from the top panel of the chiller unit to a window duct that can be purchased aftermarket (reference pictures below).

System Operation

1. **Garment or Pad Connection**; Connect the extension tubing to the chiller unit and liquid cooling garment and/or cooling pad. An audible 'click' ensures a good connection.

2. **Apply the Cooling Garment and/or Cooling Pad**; Once donned, create a snug fit. For optimal cooling performance, wear the vest against bare skin. For a cooling pad, place in desired location and secure in place if necessary.

3. **Start Refrigeration;** Turn the power switch on. Using the remote controller, ensure 'Pump" is off. Press "System" on to start refrigeration.

4. **Temperature Setting**: Use the 'Temp' up and down buttons on the remote controller to set the desired temperature for the circulation liquid. The liquid temperature will go down to the set point in minutes.

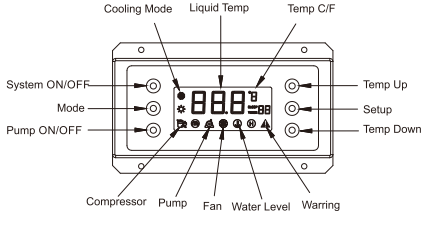

Note:
Setting is completed when LED number stops blinking. The steady number shows the current liquid temperature.

Indicator shows the ON/OFF status of refrigerator and pump.

5. **Start Pump**: Press the 'Pump' button on the control panel to start or stop circulation. Ensure the extension tubing is connected in a closed loop between the chiller and garment and/or pad before circulation begins. Make sure no kinks exist in the extension tubes. Otherwise, flow and cooling performance will be impeded. If flow is impeded or disconnected at the garment and/or pad, the liquid will be diverted and flow through a check valve whereby circulation will remain in a closed loop between the chiller and extension tubes only (reference diagram below).

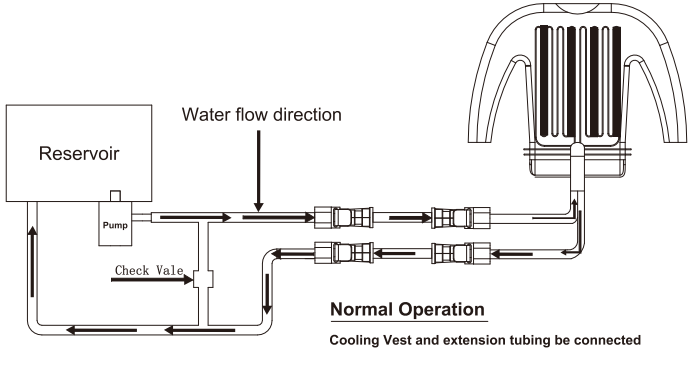

Maintenance

1. **Cleaning**; Several parts of the RDCU may require cleaning as follows:

    a. **Chiller Unit**; The protective metal housing of the chiller box may be cleaned with a damp cloth and alcohol-based cleaning solution.
    b. **Garment**; Machine washing with cold water on a gentle or delicate cycle is acceptable using a laundry bag. Hang drying is the only acceptable drying method. Do not use bleach, an iron or place the vest in a machine dryer.
    c. **Reservoir**; Remove the plug from the underside of the chiller and drain the liquid. If the liquid contains anti-freeze, contain and discard this liquid according to your local regulations. Replace the drain cap and remove the filler cap on the topside of the PCCU. Refill the reservoir with a solution of clean water, disinfectant and/or scale remover. Allow that to dwell for 10 minutes and drain again. Leave the drain cap off and allow the reservoir to dry completely. Replace the drain cap before next use.

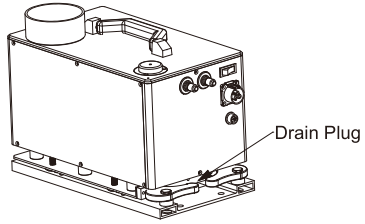

    d. **Condenser**; To keep the chiller at optimum cooling capacity, the condenser should be kept free of dust and dirt. To check if cleaning is necessary, open the side panel and remove the fans. If cleaning is required, use 50-100psi compressed air to clean the contamination.

    Note – always use protective eyewear when cleaning with compressed air.

2. **Charging Refrigerant**; (not recommend for uncertified operator)

    If the cooling capacity has been decreased due to lack of refrigerant, the RDCU will need to be recharged by a licensed refrigeration specialist using 150g of R134a refrigerant. The refrigerant charging port is also found behind this side panel.

Storage

1. Disconnect the power cord.
2. Disconnect the extension tubing.
3. Empty and clean the reservoir by following the instructions under the Maintenance section 1.b.
4. Pack the unit for storage.
5. Restart: after long term storage the chiller reservoir should be flushed using a solution of clean water and 5% detergent. Follow Priming instruction number 5 under the section for System Preparation and allow this solution to circulate for 10 minutes with a cooling garment or cooling pad connected. Then empty the detergent solution and refill with the proper operating liquid according to the same priming instructions.
6. Battery Storage:
    - Keep in a clean, dry, and ventilated room at 0℃-35℃ (32°C-95°F)
    - Keep away from any heat source
    - Do not touch corroded contacts or elements
    - Charge stored batteries every 6 months
    - Keep batteries out of children's reach

Do not use batteries if any damage or abnormalities are observed.

Components Renewal

Open the side panels to replace the fans and pump if damaged, or to use the refrigerant charging port when refrigerant is low. The remote controller and heater can also be replaced if damaged.

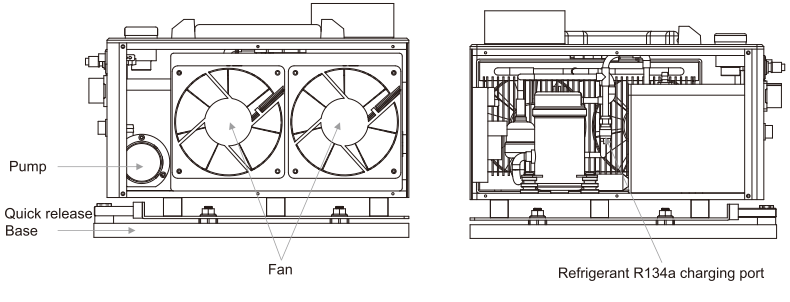

Cautions

1. Ensure power source is 12-16VDC before connecting chiller to vehicle power.
2. Ensure vehicle power is 250W or 20A before operation.
3. Repetitively cycling the chiller within a short period of time using the 'System On/Off' button will adversely affect the refrigeration system and power consumption.
4. Do not block the air inlet and outlet. It may lessen cooling performance or worse yet, cause the compressor to overheat.
5. Ensure cooling garments or cooling pads are connected to the chiller before starting the pump. Otherwise, leakage will occur.
6. Use anti-freeze liquid if temperature setting lower than 0℃ (reference System Preparation section, instruction #5.)
7. Please use optional Compcooler battery COMP-RB1220 only to run the chiller unit if needed.
8. Do not operate the chiller close to a heat source or in ambient temperatures greater than 60℃ (140°F).
9. Do not operate the chiller in wet or submerged conditions.
10. Stop operation and disconnect the power if high vibration or abnormal noise is observed.
11. Always use protective eyewear when cleaning the chiller with compressed air.
12. Do not use batteries if any damage or abnormalities are observed

Fault Codes on Remote Controller

Item	Code	Description
1	E1	Wrong Polarity or reverse connection from the power input
2	P1	No temp signal from sensor

Troubleshooting

Problem Description	Possible Cause	Solution
No cooling	Compressor locked, Overheat protection, Low Voltage	See below diagram
	No liquid circulation	Check if pump is turned on and cooling garment is connected, and no kinks or blockage exist.
	Power connection	Check connection of refrigeration unit to power source. Replace power cord if loose or damaged.
Low cooling capacity	Low heat exchange rate for evaporator	Check liquid level inside reservoir. Replenish if low.
	Low refrigerant level	Check if air from condenser air outlet is hot. Air should be hot for normal operation. Recharge refrigerant R134a if need.
	Low voltage	Check unit input voltage (not the voltage of power supply). Operation voltage should greater than 12V DC.
No liquid flow	Pump is Off	Turn pump on.
	Problem with quick fitting connection between unit and garment	Check that quick fitting connection on extension tubes are connected properly and not blocked or broken.
	Pump blocked	Disassemble the pump from chiller unit and clean if blocked.
Remote controller is not working	Loose connection	Make sure there is a tight connection of controller plug to refrigeration unit.
	Controller LED output is sporadic or unclear	Contact manufacturer for replacement if under warranty or purchase an extra remote controller.
Faulty temperature sensor	No feedback; reference 'P1' fault code on remote controller.	Check if sensor connection on the control board is loose or replace the sensor.

Compressor issue:

Compressor malfunctions can be analyzed by counting the number of LED flashes.

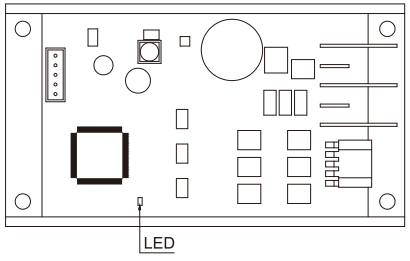

LED Flash Count	Type of Errors
1	Compressor locking or overloaded
2	Disconnection of compressor line or an error of sensing current
3	Short-circuit on motor parts or over-current
4	Abnormal DC voltage
5	Overheating of the controller

Safety

Warning: It is important to become thoroughly familiar with the operating characteristics of the Compcooler Refrigeration Chiller Unit. It is the owner's responsibility to assure proper User training of the cooling system including component knowledge, system preparation, system operation and maintenance. Disregarding this warning can result in injury to the operator and severe mechanical damage to the unit.

Warranty

Compcooler warrants this product to be free from defects in workmanship and materials, under normal residential use and conditions, for a period of one (1) year from the date of shipment. Shipping and handling fees are to be paid for by the customer. The manufacturer agrees, at its option during the warranty period, to repair any defect in material or workmanship or to furnish a repaired or refurbished product of equal value in exchange without charge (except for fees for shipping, handling, packing, return postage, and insurance which will be incurred by the customer). Such repair or replacement is subject to verification of the defect or malfunction and proof of purchase as confirmed by showing the model number on original dated sales receipt.

Certifications

Certifications

CE, UL, FDA, FCC, RoHS, PSE

Quality System

Customer service:
simonsun@compcooler.com