COMPCOOLER

Compact Thermal Regulation Technology

On line Shopping

www.compcooler.shop

simonsun@compcooler.com

Designed in USA
Made in China

Micro Liquid Chiller Module

Model Number:

COMP-LCM-24400PHE-S
COMP-LCM-12200PHE-S

Operation Manual

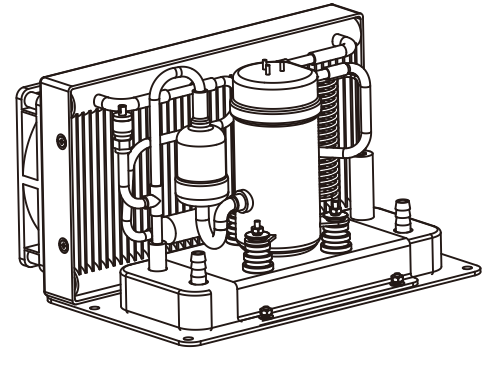

COMPCOOLER

Compact Thermal Regulation Technology

COMPCOOLER

Thermal Regulation Technology

Compact Refrigeration Chiller Cooling Unit

- Liquid Chiller Module
- Micro Chiller Unit
- Direct Contact Cooling Unit

Active Thermal Regulation Solutions
for Confined Space and Hot Ambient.

Contents

System Description:

Liquid Chiller Module (LCM) is a compact refrigeration cooling system that incorporates a plate heat exchanger, miniature compressor, condenser, condenser fans and Plate Heat Exchanger (Evaporator). It is offered in two version to deliver 200W (12V) and 400W (24V) cooling capacity. It is powered by DC power, a rechareable battery or 110-220V AC power adapter.

The LCM comes fully charged with R134a refrigerant making it ready for integration with the User's equipment or system. Customer may set up his control program to fit it's equipment. Or customer may use Compcooler's control board as optional.

Component List

Item	Part number	Description	Quantity
1	**COMP-LCM-24400S**	Liquid Chiller Module	1
		Condenser Fans	2
		Plate Heat Exchanger	1
		Compressor Drive board	1
2	Manual		1

Component Description

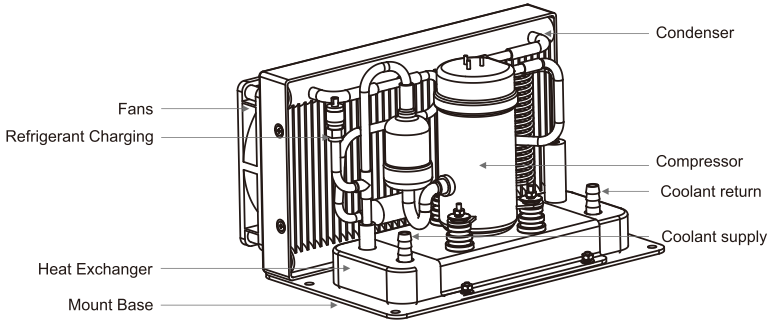

Optional Components

Item	Part Number	Description
1	COMP-CB-LCD	Compcooler control board LCD
2	COMP-ET38-2M	Extension tubing 3/8" (8x12mm) 6ft (2 meters)

Dimensions, Chiller Unit

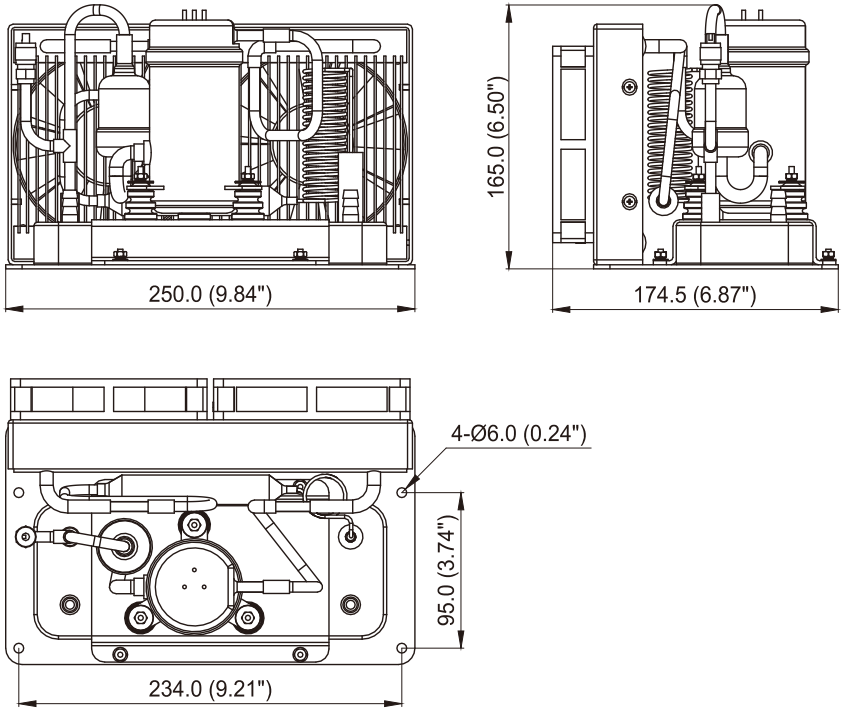

Technical Datasheet

Model Number: COMP-LCM-24400PHE-S	Description
Compressor	Miniature DC Rotary Compressor
Refrigerant	R-134a
Cooling capacity	400W (See Performance curves)
Cooling Liquid	Water, Water/Glycol Mixtures
Liquid Temperature	-5 to 40°C (23 to 104°F)
Voltage	24VDC (Range 22-32VDC)
Operating Current	4-8Amps (Max 15Amps)
Max Power Draw	250W (24V)
Condenser	120x240mm
Plate Evaporator	Danfoss
Refrigerant Control	Capillary Tube
Dimension	250x174.5x165mm(9.84x6.87x6.50inch)
Weight	3KG (6.5lbs)
Noise	50dBA Less
Operating Ambient Temperature	-10 to 45°C (14 to 113°F)
Storage temperature	-20 to 70°C (-4 to 158°F)

Cooling Performance

The Performance Curves below defines the performance of LCM. The data shown below derived using 2L/min water flow with 150cfm airflow.

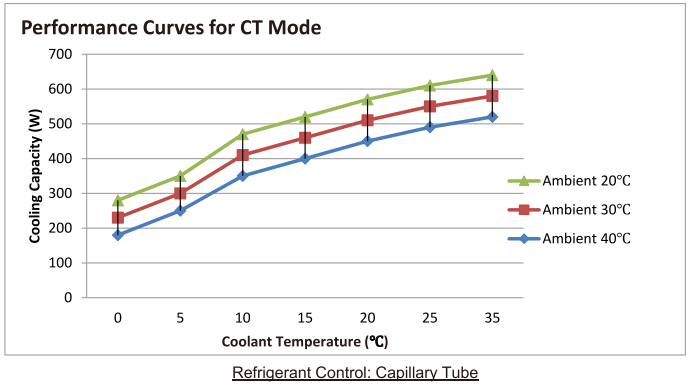

Refrigerant Control: Capillary Tube
Testing Standard: NMB-MAT 4715KL-05W-B50

LCM Assembly

Compcooler LCM is supplied on a base plate. Hole locations are shown in the drawing below. There are 4 holes (6mm or 0.236 inch diameter) that can be used to mount the LCM.

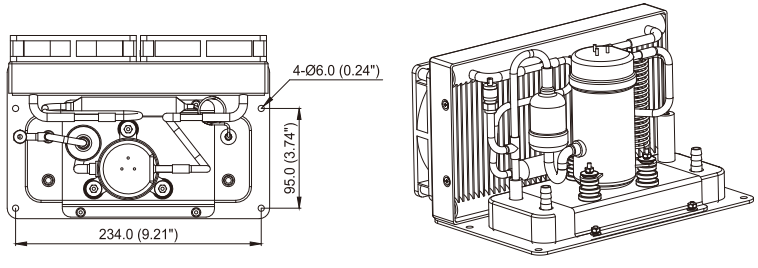

LCM must be operated in the vertical orientation (reference drawing below). Operation of the system at an orientation more than 30 degree from vertical may result in reduced system capacity or damage to the compressor and system.

Compressor Control

Please refer to the Samsung Compressor Drive manual for detailed wiring and functionality of the drive board. The motor drive board is a variable speed drive. It allows the cooling capacity of the system to be adjusted by increasing or decreasing the compressor speed. The compressor drive board utilizes a user supplied 2.19-4.8V analog signal to set compressor speed. The firmware has a minimum speed of 1800rpm and a Max speed of 6000rpm.

Please see the link as below:
https://www.samsung.com/global/business/compressor/mini-rotary-compressor/

System Preparation

1. **Environmental:** Please refer to technical data sheet on page for LCM operation and storage temperatures.

2. **Condenser and Fan:** Air flow must be provided to the condenser. Compcooler has assembled the fans with condenser.

3. **Liquid connection:** The LCM terminates with 9.5mm OD (3/8”) fittings, tubing inner diameter 8mm (0.315”) and outer diameter 12mm (0.473”). For low or moderate pressure applications (less than 690kpa or 100psi), CPC or LT-style quick fittings may be used. The LCM can be operated with a coolant pressure less than 2mpa or 300psi.

   A coolant pump must be used to generate coolant flow across the evaporator. In order to achieve the best performance, insulating the coolant tube is necessary.

4. **Evaporator/Liquid Freezing:** The preferred coolant can be water or a water/glycol mixture.

   When using a water-only coolant, the liquid temperature should be set at, or above, 5°C (41°F) to avoid freezing the evaporator.
   When using a water/glycol (85%/15%)mixture, the liquid temperature should be set at -10°C (14°F)

   The **coolant** must be kept running when the LCM is ‘On’. Otherwise, the evaporator may freeze in less than 1 minute. Freezing of the evaporator may result in no cooling performance, or, it may rupture the evaporator causing a water and/or refrigerant leak and render the LCM useless. If freezing occurs, turn off the LCM and wait for the coolant to melt. Then restart the LCM and check for cooling performance. If there is no cooling, check for coolant and/or refrigerant leaks.

5. **Compressor Drive Location: The** Compressor Drive generates some heat during operation and may cause the compressor drive board to enter into overheat protection mode. To prevent overheating, place the drive board in an area with airflow.

Maintenance

1. **Condenser Cleaning**: The LCM is a sealed unit, fully charged with R134a and tested for leaks. It does not require regular maintenance to operate. However, depending on environmental conditions the condenser fins could become fouled with dust and debris. A fouled condenser will cause the LCM to operate inefficiently and potentially shut down. To clean the condenser, follow the steps below. All work should be performed while wearing safety glasses and ear protection with LCM power off.

   a. Remove the plenum and any duct work covering the condenser
   b. Attach an air nozzle to a compressed air source regulated between 50-100psi.
   c. Direct the air at the face of condenser from the interior or compressor side. Keep the nozzle 2-4inch (5-10cm) from the face of condenser. The air flow should be close to perpendicular to the face of coils.
   d. Sweep the air flow back and forth across the face of the coil to remove contamination that may have built up during prolonged use.
   e. Reattach the plenum and any ducting.

   Caution: Compressed airflow at an angle may bend or damage the condenser fins, resulting in decreased condenser performance.

2. **Plate Heat Exchanger Cleaning:** The LCM uses a micro channel plate heat exchanger which has internal liquid channels. Pure water or deionized water should be used in the chiller system, otherwise, scale may build up and block the liquid channels causing inefficient cooling capacity. If scale has built up, use a diaphragm pump to clean it.

Cautions

1. Ensure power supply is 400W or more before operation.
2. Repetitively cycling the chiller within a short period of time using the ‘System On/Off’ button will adversely affect the refrigeration system and power consumption.
3. Do not block the air inlet and outlet. It may lessen cooling performance or worse yet, cause the compressor to overheat.
4. Use anti-freeze liquid if temperature setting lower than 0℃
5. Do not operate the chiller in wet or submerged conditions.
6. Stop operation and disconnect the power if high vibration or abnormal noise is observed.
7. Always use protective eyewear when cleaning the chiller with compressed air.

Troubleshooting

Problem Description	Possible Cause	Solution
No cooling	Compressor locked, Overheat protection, Low Voltage	See Samsung compressor manual, LED flashes on the board.
	No liquid circulation	Check if pump is turned on, or heat exchanger be blocked.
	Power connection	Check connection of refrigeration unit to power source. Replace power cord if loose or damaged.
Low cooling capacity	Low heat exchange rate for evaporator	Check liquid flow rate
	Low refrigerant level	Check if air from condenser air outlet is hot. Air should be hot for normal operation. Recharge refrigerant R134a if need.
	Low voltage	Check unit input voltage (not the voltage of power supply).

Safety

Warning: It is important to become thoroughly familiar with the operating characteristics of the Compcooler Refrigeration Chiller Unit. It is the owner's responsibility to assure proper User training of the cooling system including component knowledge, system preparation, system operation and maintenance. Disregarding this warning can result in injury to the operator and severe mechanical damage to the unit.

Warranty

Compcooler warrants this product to be free from defects in workmanship and materials, under normal residential use and conditions, for a period of one (1) year from the date of shipment. Shipping and handling fees are to be paid for by the customer. The manufacturer agrees, at its option during the warranty period, to repair any defect in material or workmanship or to furnish a repaired or refurbished product of equal value in exchange without charge (except for fees for shipping, handling, packing, return postage, and insurance which will be incurred by the customer). Such repair or replacement is subject to verification of the defect or malfunction and proof of purchase as confirmed by showing the model number on original dated sales receipt.

Certifications

Certifications

CE, UL, FDA, FCC, RoHS, PSE

Quality System

Customer service:
simonsun@compcooler.com