Parts LIST

Pos.	Description	Q.ty	Material	Code (p/n)
1	O-Ring 19.18 x 2.46 [Mat. V45ED]	1	[FKM Base]	698.06.523V
2	Interface 7/8" - 14UNF / SAE J1926 (Male) for NGV2	1	Stainless Steel (316L)	698.06.801
3	NGV HF Nose (250 bar)	1	Stainless Steel (316L)	698.06.758
4	Back-up Ring	1	[PTFE Base]	698.06.506
5	O-Ring 22.2X1.78	1	[FKM Base]	698.06.508V
6	Check Valve SPRING	1	Stainless Steel (302)	691.06.989
7	Check Valve PLUNGER	1	Stainless Steel (316L)	691.02.991
8	Spacer	1	Stainless Steel (316L)	698.02.518
9	Check Valve GASKET	1	PU Compound	698.06.510P
10	O-Ring 15.47X3.53	1	[FKM Base]	698.06.507V

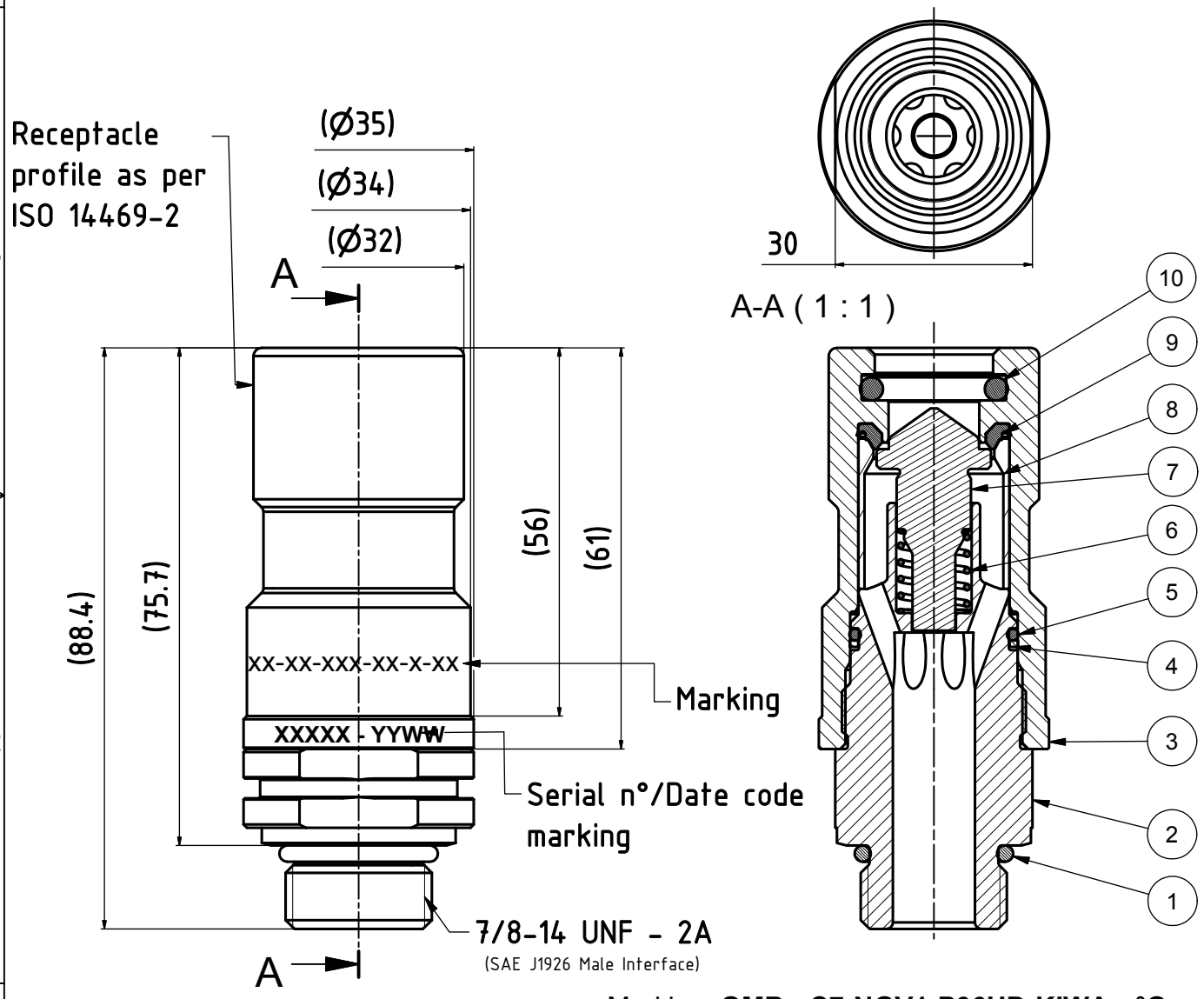

Marking: **OMB - C7-NGV1-P36HD-KIWA-n°Omologa**

REVISION No	REVISION DESCRIPTION	REVISION DATE	MODIFIED BY	CONTROL. BY
01	RDM17-289: Modified Lenght ø34	12/07/2017	N.D.	F.M.

GENERAL TOLERANCE EN 22768 cl. m K

PRE TREATMENT PART NUMBER

CRITICAL — IMPORTANT: For critical and important dimensions subjected to checks for variables we require a CPK value ≥ 1,33

DO NOT INTERPRET THE DRAWINGS, IF YOU HAVE DOUBTS ENQUIRE FOR EXPLANATIONS

PAPER SIZE	A4	SCALE	DATE	DRAWN BY	CONTROL. BY	TREATMENT	WEIGHT
REFERENCE:		1 : 1	01/03/2017	M.F.	L.A.		0,4 kg

OMB S.p.A. BRESCIA ITALY

DESCRIPTION: NGV1 P36HD Receptacle _ Connection Male 7/8"-14 UNF

MATERIAL

PROJECT GROUP: P-CNG115

PART NUMBER: 698.88.800

Questo disegno è un documento confidenziale di proprietà della OMB Saleri S.p.A., che se ne riserva la tutela a termini di legge. Senza nostra autorizzazione non può essere riprodotto.
This drawing is a confidential document and it is property of OMB Saleri S.p.A.. All rights are reserved. Any infringement will be legally pursued. Without authorization no copy is allowed.