Parts LIST

Pos.	Description	Q.ty	Material	Code (p/n)
1	Fixation NUT (SW 1"1/8)	1	Stainless Steel (316L)	698.06.791
2	Interface 7/8"-14 UNF / SAE J1926 (Female) for NGV1 P36	1	AISI 316L	698.06.792
3	Check Valve SPRING	1	Stainless Steel (302)	698.02.113
4	O-Ring 15.6x1.78	1	[FKM Base]	698.06.560V
5	Back-up Ring	1	[PTFE Base]	698.06.561
6	Check Valve PLUNGER (Assembly)	1	Stainless Steel (316L) & FKM	698.04.774
7	NGV1-P36 Receptacle Interface	1	Stainless Steel (316L)	698.06.751
8	RingNUT	1	Stainless Steel (303)	698.06.755
9	O-Ring 9,19 x 2,62	1	[FKM Base]	693.06.205V

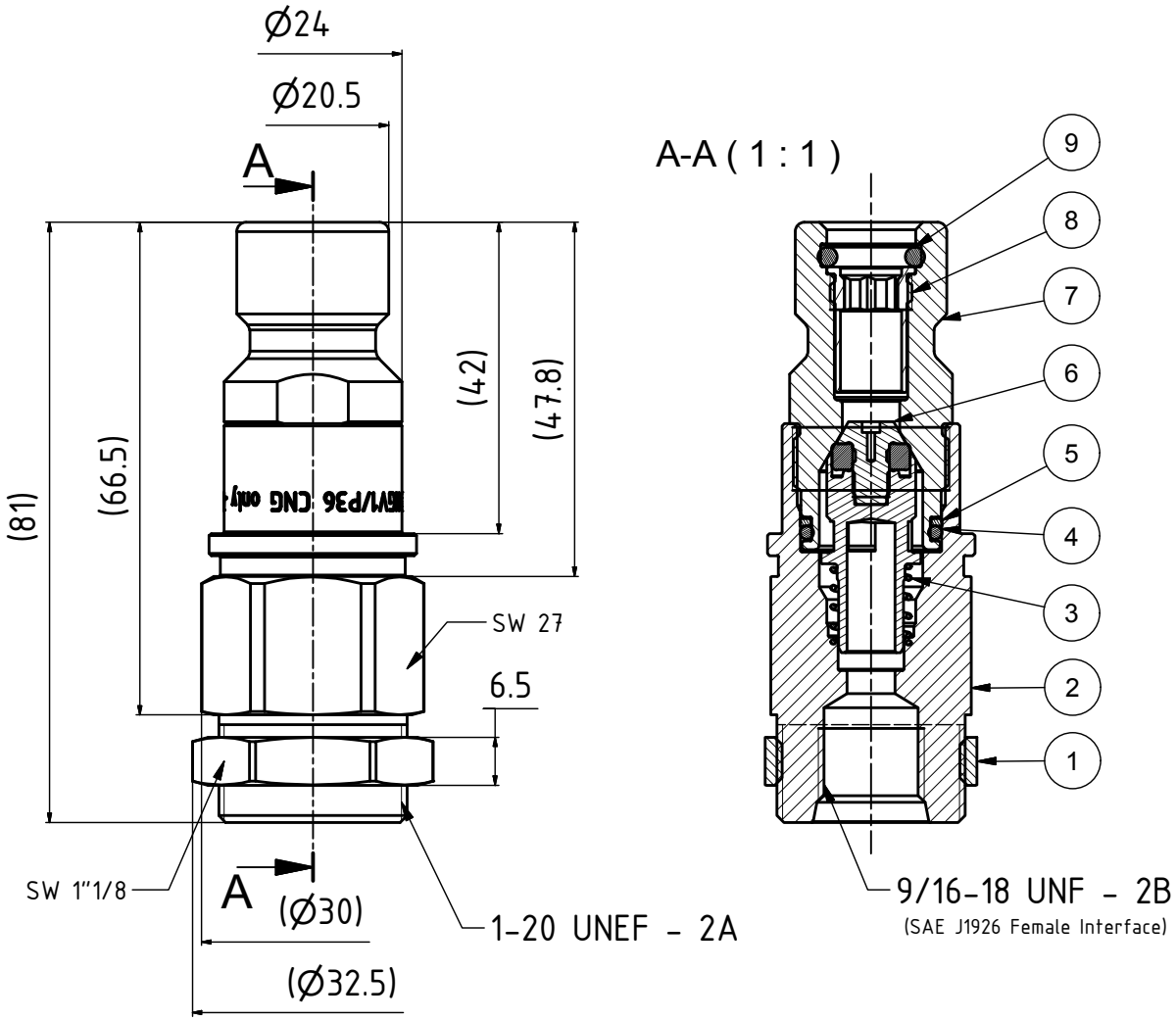

REVISION No	REVISION DESCRIPTION	REVISION DATE	MODIFIED BY	CONTROL. BY
00	RDM17-076: Issued			

GENERAL TOLERANCE
EN 22768 cl. m K

PRE TREATMENT PART NUMBER

CRITICAL

IMPORTANT

For critical and important dimensions subjected to checks for variables we require a CPK value ≥ 1,33

DO NOT INTERPRET THE DRAWINGS, IF YOU HAVE DOUBTS ENQUIRE FOR EXPLANATIONS

PAPER SIZE	A4	SCALE	DATE	DRAWN BY	CONTROL. BY	TREATMENT	WEIGHT
REFERENCE:		1 : 1	03/03/2017	M.F.	L.A.		265,1 g

OMB S.p.A. BRESCIA ITALY

DESCRIPTION
NGV1-P36 Receptacle __ Connection Female 9/16" - 18 UNF - AISI 316L

MATERIAL

PROJECT GROUP
P-CNG115

PART NUMBER
698.88.830

Questo disegno è un documento confidenziale di proprietà della OMB Saleri S.p.A., che se ne riserva la tutela a termini di legge. Senza nostra autorizzazione non può essere riprodotto.
This drawing is a confidential document and it is property of OMB Saleri S.p.A.. All rights are reserved. Any infringement will be legally pursued. Without authorization no copy is allowed.