QUICK
MILL
QM 67

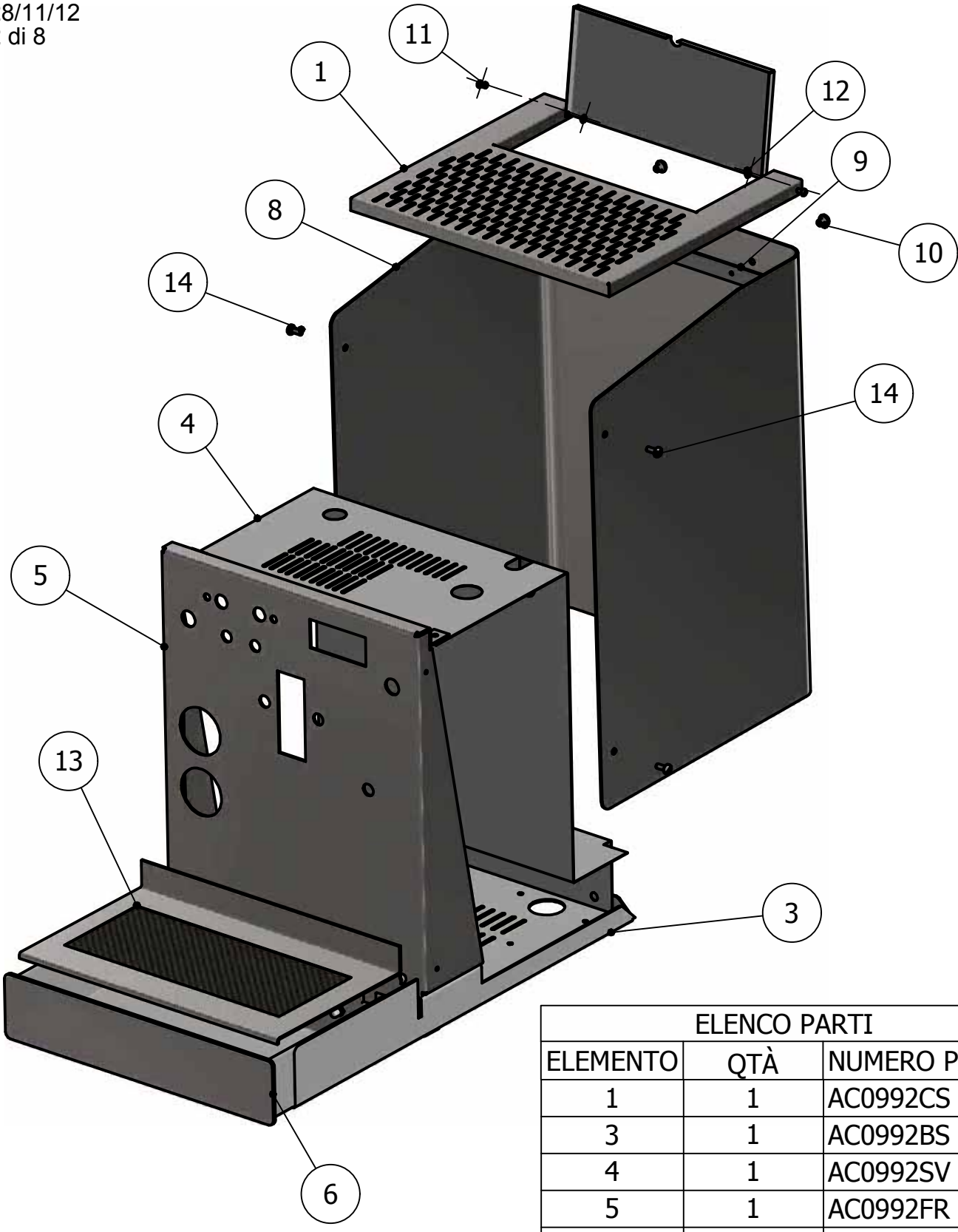

ELENCO PARTI		
ELEMENTO	QTÀ	NUMERO PARTE
1	1	AC0992CS
3	1	AC0992BS
4	1	AC0992SV
5	1	AC0992FR
6	1	AC0990VR
8	1	AC0992FA
9	1	AC0990SSN
10	2	VII52
11	2	VII50
12	2	DAI3
13	1	AC0990GPL
14	4	VII43

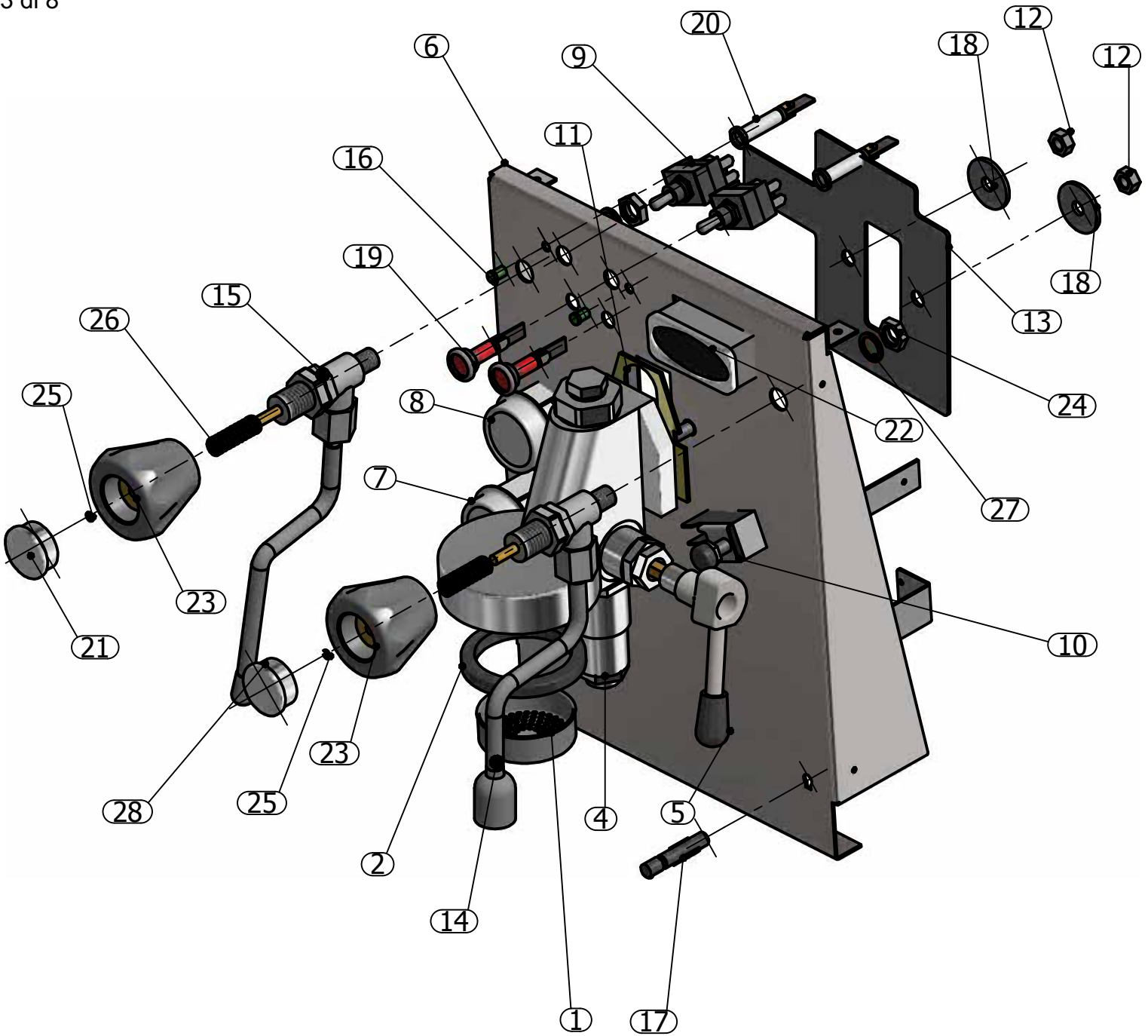

ELENCO PARTI		
ELEMENTO	QTÀ	NUMERO PARTE
1	1	AC0970FS
2	1	GO0970GS
4	1	OT0970CG
5	1	PL0980MC
6	1	AC0992FR
7	1	MANO970N
8	1	MANO980N
9	2	IN0970B
10	1	INO992MI
11	1	ISO970
12	2	DA8B
13	1	FE0992PI
14	1	OT0980RUA
15	1	OT0980RUV
16	2	PLGEVERDE
17	1	PLO7000SA
18	2	ROB29
19	2	SEO970FR
20	2	SEO500V
21	1	TABSVAP
22	1	TERMOPIDC2
23	2	PL0980MRN
24	2	OT0970GH
25	2	ANE4INOX
26	2	MOLLAX
27	2	RA0980VS
28	1	TABSACQ

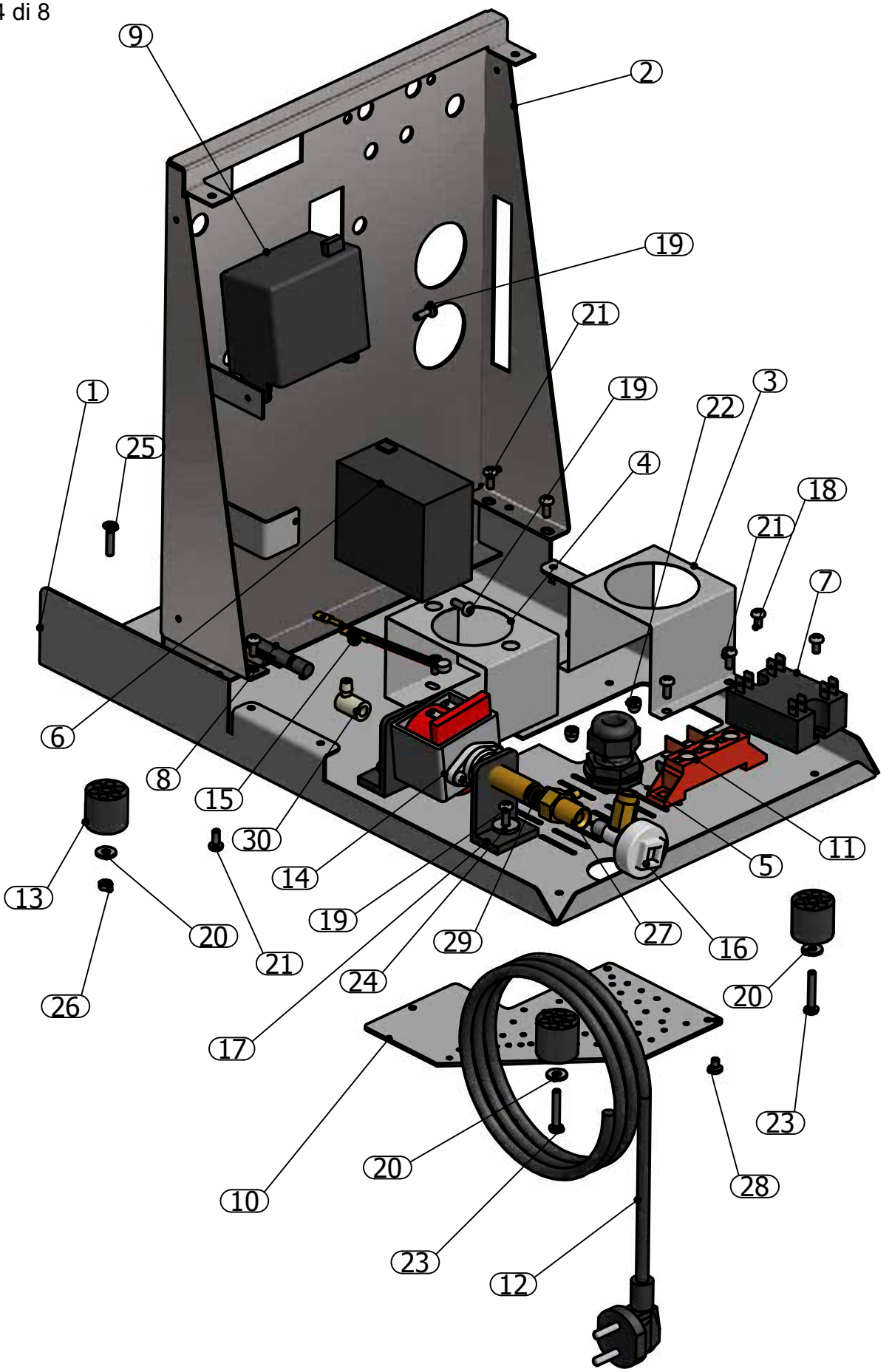
9
2
19
21
19
3
22
1
25
4
18
21
7
6
8
15
30
14
19
29
24
17
13
20
21
26
11
5
27
16
20
23
28
20
10
23
12

ELENCO PARTI		
ELEMENTO	QTÀ	NUMERO PARTE
1	1	AC0992BS
2	1	AC0992FR
3	1	AC0992CC
4	1	ACO970CC
5	1	PLO980PG16
6	1	SCHO992 230V SCH0992V1 115V
7	1	RELE05010
8	1	PLO7000SA
9	1	ALITERMOPID 230V ALITERMIPID1 115V
10	1	AC0992TR
11	1	FV110B 115V PL0980MS 230 V
12	1	CAVO-F3P 230V CAVO/14 AWG14 UL 115V
13	4	GO0970PF
14	1	PO08700 230V 50HZ PO0980 115V 60HZ
15	1	KLIXON
16	1	PL0800PU
17	2	GO0900SP
18	3	VII48
19	4	VII193
20	4	ROBI02
21	11	VII21
22	6	DA4CF
23	2	VII42
24	2	RODI24
25	2	VII199
26	2	DAI4
27	1	PL08700VA
28	2	VII44
29	1	OR837
30	1	GO03000PG

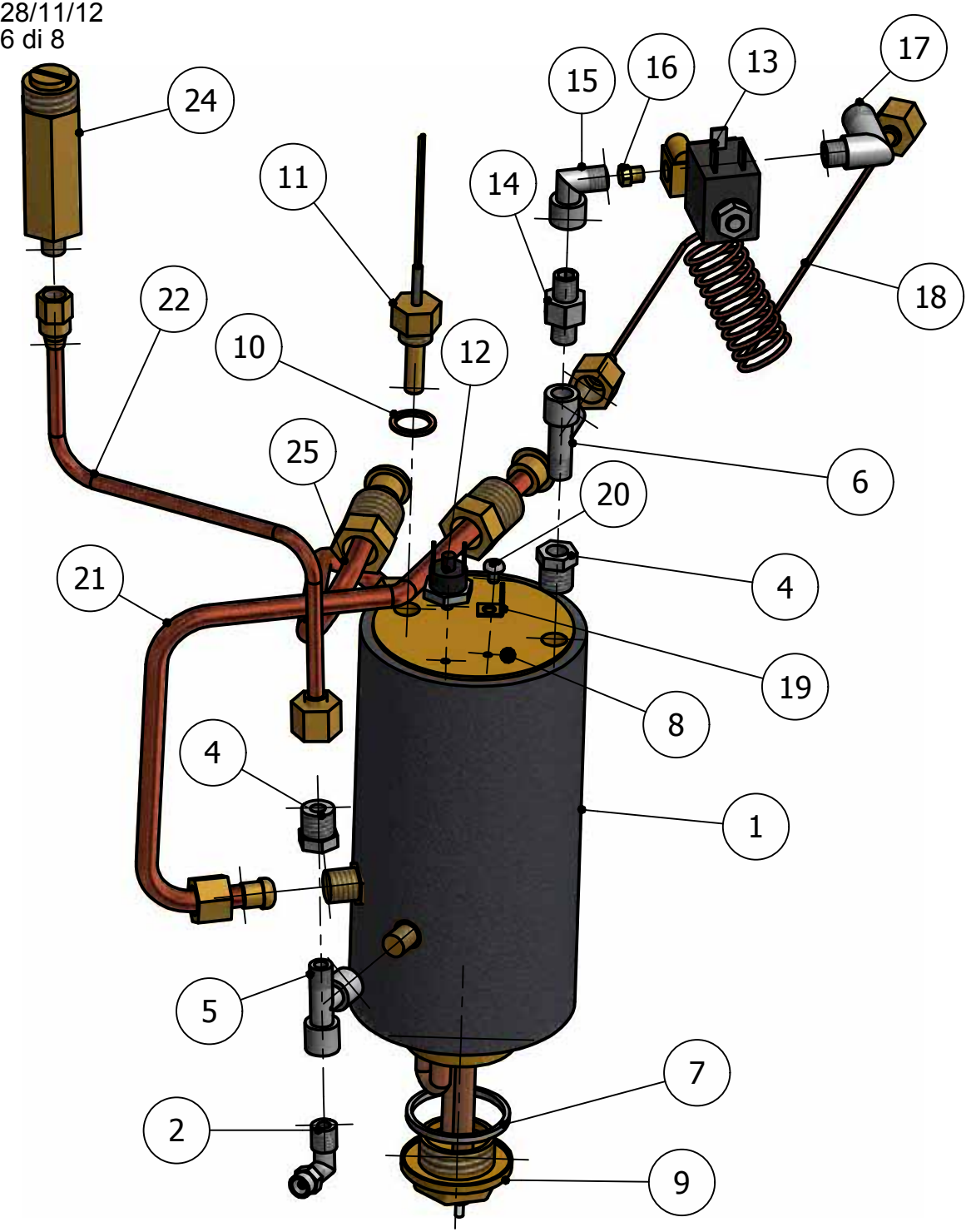

ELENCO PARTI		
ELEMENTO	QTÀ	NUMERO PARTE
1	1	ISLASTRAcaffè
2	1	OT0810RA
3	1	OT0825ND
4	2	OT0980RC
5	1	OT0980RT8
6	1	OT05000RM
7	1	PL0970GR
8	1	RA0970CA
9	1	RA0992RE 230V RA0992REC 115V
10	1	RO0980VS
11	1	SO04005
12	1	TE07100
13	1	EV08700R 230V EV0980V1 115V
14	1	OT0400N8
15	1	OT0980RL8
16	1	OT0995GI
17	1	OT02820RL
18	1	RA0970CMN
19	1	BM01009
20	1	VII44
21	1	RA0992CI
22	1	RA0992TVE
24	1	OT0990VEN
25	1	RA0992CS

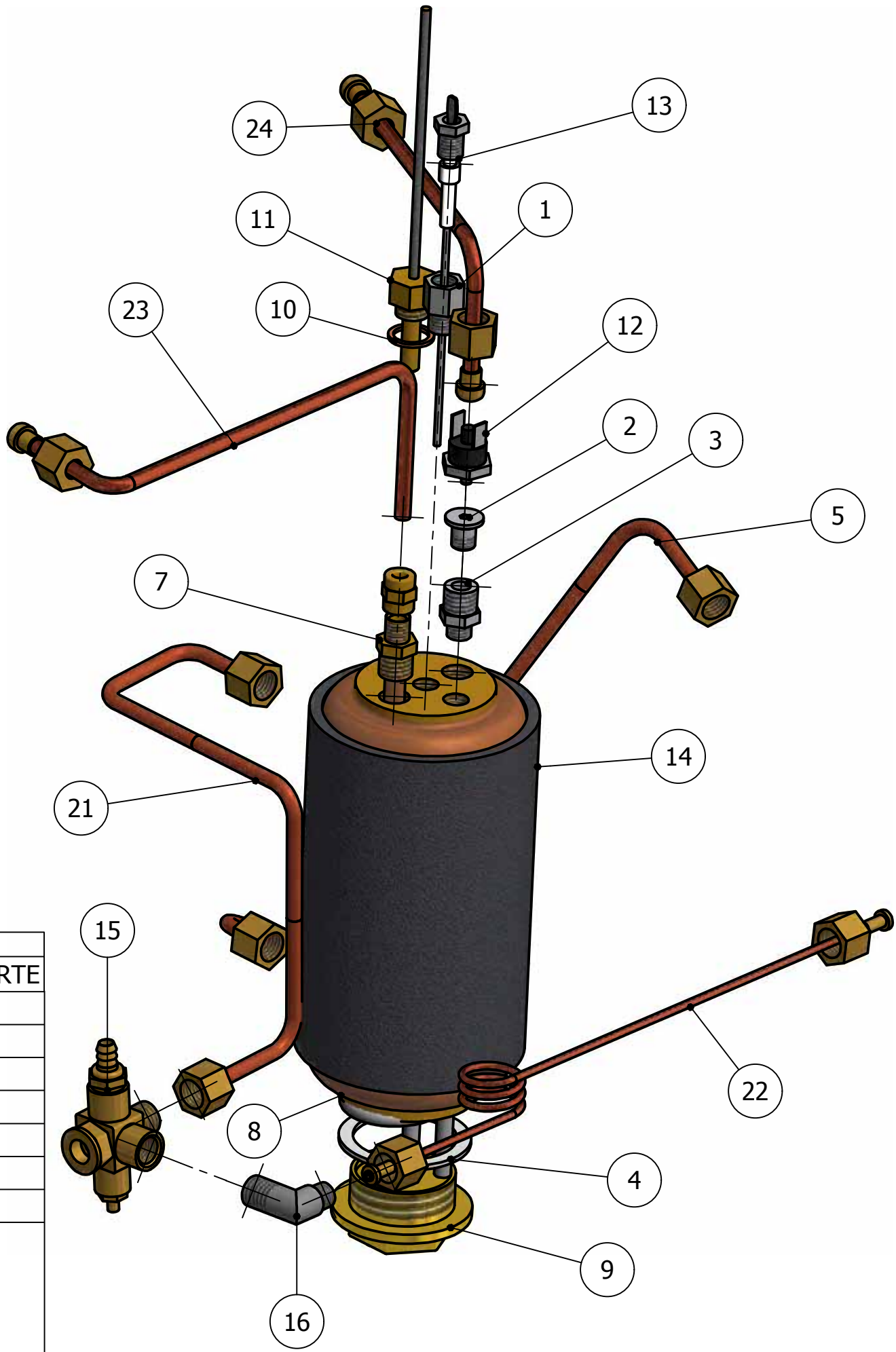

ELENCO PARTI		
ELEMENTO	QTÀ	NUMERO PARTE
1	1	OT0980RC8
2	1	OT04010T8
3	1	OT06000R8
4	1	PL0980GR
5	1	RA0992TC
7	1	RA0980PA
8	1	RA0992CA
9	1	RA05008RE 230V RA05008RE1 115V
10	1	RO0980VS
11	1	SO05010
12	1	TE07100
13	1	SONDA
14	1	ISLASTRAvapor e
15	1	OT0992VA
16	1	OT02820RL
21	2	ra0992tp
22	1	RA0970CM
23	1	RA0992RA
24	1	RA0992VE

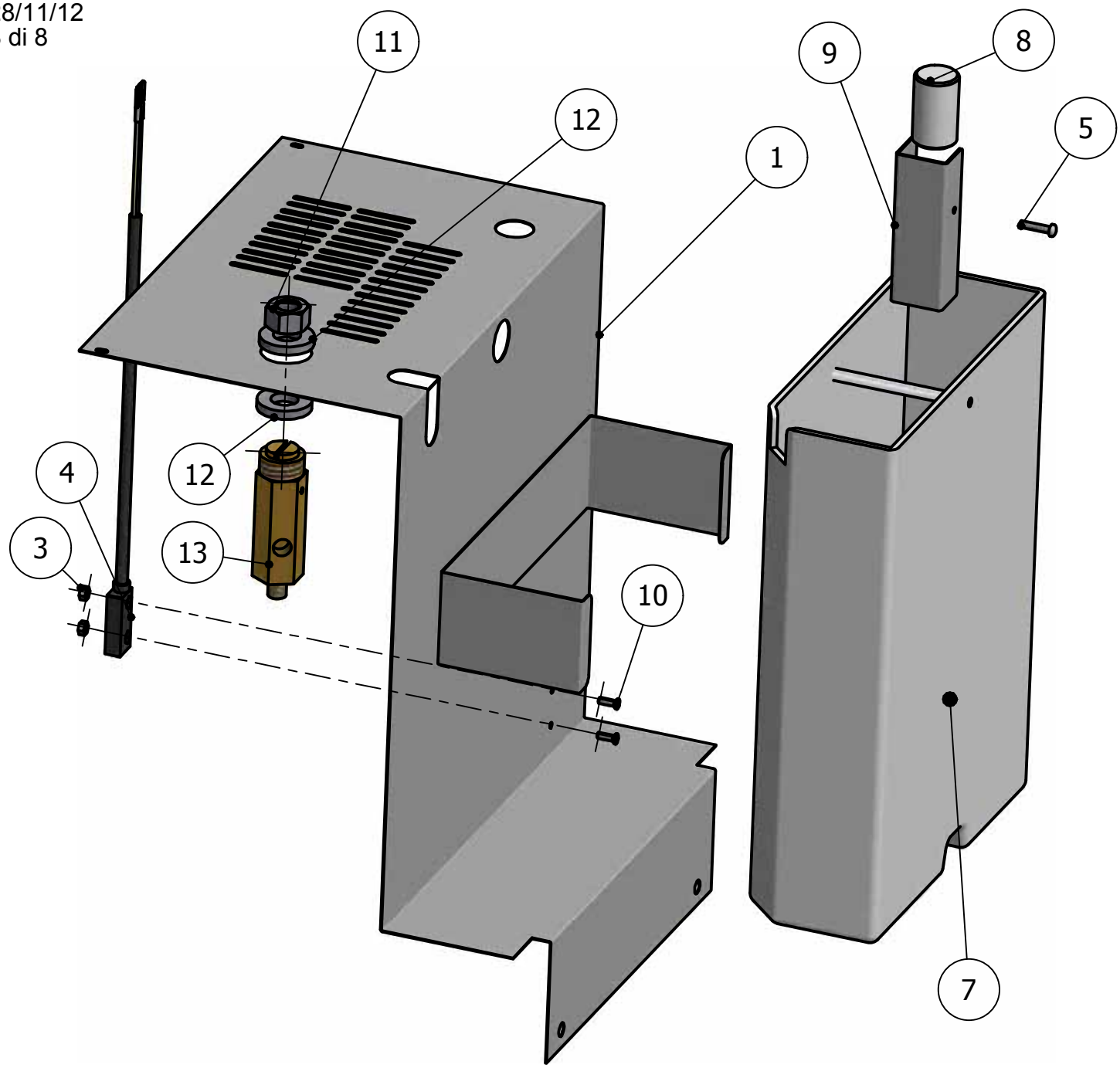

ELENCO PARTI		
ELEMENTO	QTÀ	NUMERO PARTE
1	1	AC0992SV
3	2	DAI3
4	1	SEN0980
5	1	VII16
7	1	PL0970VA
8	1	PL0980GA
9	1	ACO980GG
10	2	VII46
11	1	DA0970
12	2	RONDELLA 1/2 "
13	1	OT0990VE