xantrex™

FREEDOM SW INVERTER/CHARGER DATASHEET

AVAILABLE IN:
12V ⎓

2000W/100A
3000W/150A

THE HEART OF YOUR POWER SYSTEM

Freedom SW series from Xantrex are the most advanced and capable inverter chargers in the mobile market. Available in 3000 W with 150 A charger and 2000 W with 100 A charger, these units are packed with features like "Generator Support Mode" which enables the Freedom SW to assist a generator when AC loads exceed the generator's capacity. They are also stackable for extra power and with the ComBox accessory, data logs and system control can be pushed to your tablet or phone! If you are looking for a unit for your air conditioning, this is the one! With a powerful long duration 2x surge and other industry leading features, the Freedom SW series will handle demanding power requirements. Also available is 24V.

- Built-in hybrid functionality - combines shore and AC generator input to power loads
- Designed to charge lithium ion batteries
- Meets UL458 with marine supplement, CSA, ABYC and FCC Class B
- Exceptional surge for extended time

APPLICATIONS:

H.A.L.T.

ETL listed to CSA Standard C22.2 No. 107.1 and UL 458* with Marine supplement

*For marine supplement compliance drip shield in specific mounting orientation is required. See installation guide.

2 YEAR WARRANTY

www.xantrex.com
CUSTOMER CARE: 1.800.670.0707

FRONT VIEW

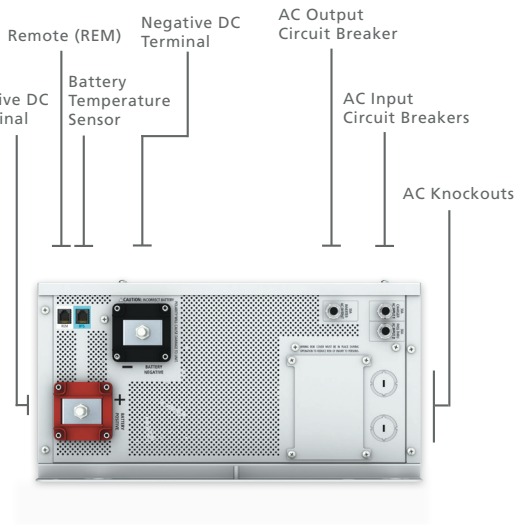

SIDE VIEW

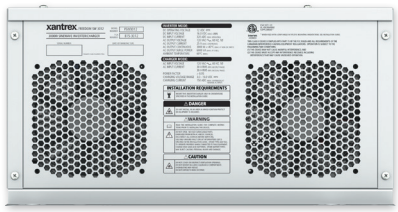

SIDE VIEW

PRODUCT FEATURES

- Parallel stacking enables the Freedom SW inverter/chargers to double the available AC output current in inverter mode
- Series stacking enables the Freedom SW inverter/chargers to generate 120/240 V split phase power*
- Temperature compensated charging for varying climate conditions
- Available AutoGen Start accessory, ComBox accessory
- True sine wave output to operate sensitive electronics
- Advanced configuration options for customized applications
- Built-in transfer switch automatically transfers between inverter power and incoming AC power
- Ignition lockout feature helps to minimize unnecessary battery drain**
- Full inverter output up to 40°C (104°F) for 3000W model; 30°C (86°F) for 2000W model
- Dual input / Dual output AC interface for 3000 W model only
- Conformal coated circuit boards for humid environments
- Battery over-voltage and under-voltage protection
- Power factor corrected multi-stage charger for fast, efficient charging
- Ability to charge batteries drained to extremely low voltage

PROTECTION FEATURES

- Battery over-voltage and under-voltage protection
- Over-temperature shutdown
- Automatic overload protection
- Short-circuit protection
- Integrated, resettable AC breakers

* AC source must be split-phase, requires Stacking Cable (#808-9005).
**When used with On/Off Remote Panel sold separately

RECOMMENDED ACCESSORIES

Available telephone to network cable adapter to avoid the need to replace cables when replacing and old inverter. (#808-9010 sold separately)

FREEDOM SW Conext Combox (809-0918)

xantrex COMBOX

DOWNLOAD ON

ONLY FOR TABLETS

- Control inverter
- Control generator
- Shore breaker size
- Data logging

ELECTRICAL SPECS - INVERTER

	FREEDOM SW 2012	FREEDOM SW 3012
Output power (continuous at 40°C)	2000 W	3000 W
Surge rating (5 seconds)	4000 W	6000 W
Peak output current	55 A	80 A
Output frequency	60 Hz +/- 0.2 Hz	60 Hz +/- 0.2 Hz
Output voltage	120 Vac	120 Vac
Output wave form	True sine wave	True sine wave
Optimal efficiency	90%	90%
No-load power draw (inverting)	3 Adc	3 Adc
Input DC voltage range	10 - 16 Vdc	10 - 16 Vdc
AC connections	Single phase in/out	Split phase in / dual out, Dual in / dual out

ELECTRICAL SPECS - BATTERY CHARGER

	FREEDOM SW 2012	FREEDOM SW 3012
Output current (continuous at 25°C)	100 A	150 A
Output voltage	12 Vdc	12 Vdc
Output voltage range	5 - 16 Vdc	5 - 16 Vdc
Charge control	3 stage with manual equalize	3 stage with manual equalize
Charge temperature compensation	Remote battery sensor (included)	Remote battery sensor (included)
Optmial Efficiency	> 85%	> 85%
AC input power factor (maximum charge)	0.98 typical	0.98 typical
Input current (for maximum charging)	16 A rms nominal	24 A rms nominal
Input AC voltage	120 Vac	120 Vac
Input AC voltage range	85 - 140 Vac	85 - 140 Vac
Dead battery charge	> 5 Vdc	> 5 Vdc

GENERAL SPECS

	FREEDOM SW 2012	FREEDOM SW 3012
Compatible battery types	$LiFePO_4$ / Flooded / gel / AGM*	$LiFePO_4$ / Flooded / gel / AGM*
Transfer relay rating	1 leg of 30 A	2 legs at 30 A each
Transfer time (AC to inverter and inverter to AC)	< 20 ms	< 20 ms
Optimal operating temperature range	- 4°F to 140°F (- 20°C to 60°C)	- 4°F to 140°F (- 20°C to 60°C)
Storage ambient temperature range	- 40°F to 185°F (- 40°C to 85°C)	- 40°F to 185°F (- 40°C to 85°C)
Part Number	815-2012	815-3012
L x W x H	7.75 x 13.5 x 15.25” (197 x 343 x 387 mm)	7.75 x 13.5 x 15.25” (197 x 343 x 387 mm)
Net Weight	60.5 lbs (27.5 kg)	60.5 lbs (27.5 kg)

REGULATORY APPROVALS

	FREEDOM SW 2012, FREEDOM SW 3012
Safety	ETL listed to CSA 107.1, UL458 and UL458 Marine Supplement (drip shield with product number 808-9004 required) ABYC E-11, A-31, A-32
EMC	CFR 47, FCC, PART 15, Subpart B, Class B and CAN ICES-3 (B) / NMB-3 (B)

*System Control Panel is required for configuring various battery types

FREEDOM SW DIMENSIONS

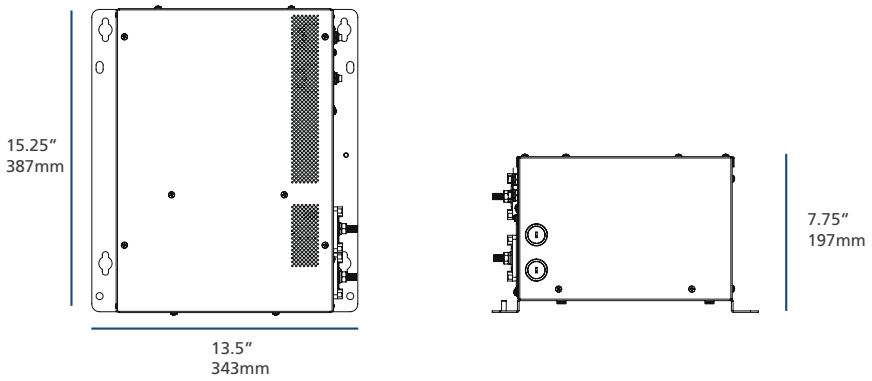

ACCESSORIES

Mfg Part #	Description
809-0946	Battery temperature sensor
808-9002	Freedom SW On/Off Remote Panel
809-0915	Automatic Generator Start (AGS)
809-0921	System control panel (SCP)
809-0940	25’ network cable for system control panel
809-0941	50’ network cable for system control panel
809-0942	75’ network cable for system control panel
808-9004	Drip shield
808-9003	GFCI option
808-9005	Stacking cable for series stacking
809-0918	Freedom SW Combox
808-9010	Freedom SW telephone to network cable adapter

MASTER CARTON INFO

Master carton quantity	1
Master carton dimensions (H x W x L)	11.8 x 17.1 x 20.5” (300 x 435 x 522 mm)
Master carton weight	FREEDOM SW 2012 - 30 kg (66 lbs) / FREDOM SW 3012 - 35 kg (77 lbs)

CONTACT

CUSTOMER SERVICE
1.800.670.0707
customerservice@xantrex.com
Hours of operation:
6:30am - 4:30pm PST, Monday to Friday

facebook.com/Xantrex
@Xantrex
youtube.com/XantrexTechnology

LEARN MORE ON:
www.xantrex.com

Smart choice for power™

xantrex™

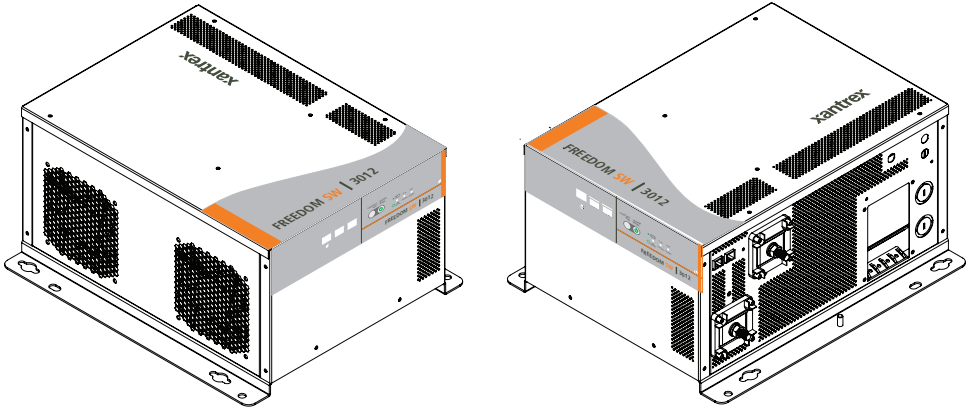

Freedom SW 3012 shown.

Owner's Guide

Freedom SW
Sine Wave Inverter/Chargers

Model Numbers

815-3012, 815-3024
815-2012, 815-2024

xanbus™
ENABLED

Exclusion for Documentation

UNLESS SPECIFICALLY AGREED TO IN WRITING, SELLER

(A) MAKES NO WARRANTY AS TO THE ACCURACY, SUFFICIENCY OR SUITABILITY OF ANY TECHNICAL OR OTHER INFORMATION PROVIDED IN ITS MANUALS OR OTHER DOCUMENTATION;

(B) ASSUMES NO RESPONSIBILITY OR LIABILITY FOR LOSSES, DAMAGES, COSTS OR EXPENSES, WHETHER SPECIAL, DIRECT, INDIRECT, CONSEQUENTIAL OR INCIDENTAL, WHICH MIGHT ARISE OUT OF THE USE OF SUCH INFORMATION. THE USE OF ANY SUCH INFORMATION WILL BE ENTIRELY AT THE USER'S RISK; AND

(C) REMINDS YOU THAT IF THIS MANUAL IS IN ANY LANGUAGE OTHER THAN ENGLISH, ALTHOUGH STEPS HAVE BEEN TAKEN TO MAINTAIN THE ACCURACY OF THE TRANSLATION, THE ACCURACY CANNOT BE GUARANTEED. APPROVED CONTENT IS CONTAINED WITH THE ENGLISH LANGUAGE VERSION WHICH IS POSTED AT WWW.XANTREX.COM.

Document Part Number

97-0019-01-01

Date and Revision

Aug 2019 Rev H

Product Numbers

815-2012 (Freedom SW 2012), 815-2024 (Freedom SW 2024)
815-3012 (Freedom SW 3012), 815-3024 (Freedom SW 3024)

Contact Information

Telephone: 1 800 670 0707 (toll free North America)
1 408 987 6030 (direct)

Web: www.xantrex.com

Information About Your System

As soon as you open your product, record the following information and be sure to keep your proof of purchase.

Serial Number _____

Product Number _____

Purchased From _____

Purchase Date _____

To view, download, or print the latest revision, visit the website shown under Contact Information.

About This Guide

Purpose

The purpose of this Owner's Guide is to provide explanations and procedures for operating, troubleshooting, and maintaining the Freedom SW Inverter/Charger.

Scope

The Guide provides safety and operating guidelines as well as information on configuring the inverter/charger. It also provides information about troubleshooting the unit. It does not provide details about particular brands of batteries. You need to consult individual battery manufacturers for this information.

Audience

The Guide is intended for users and operators of the Freedom SW Inverter/Charger.

Related Information

You can find more information about Xantrex-branded products and services at **www.xantrex.com**.

For information on product installation, please refer to the *Freedom SW Installation Guide* (Document Part Number: 97-0020-01-01).

NOTE: The Installation Guide is primarily intended for qualified personnel who need to install and configure the Freedom SW Inverter/Charger. Qualified personnel have training, knowledge, and experience in:

- Installing electrical equipment and PV power systems (up to 1000 volts).
- Applying all applicable installation codes.
- Analyzing and reducing the hazards involved in performing electrical work.
- Selecting and using Personal Protective Equipment (PPE).

Important Safety Instructions

IMPORTANT: READ AND SAVE THIS OWNER'S GUIDE FOR FUTURE REFERENCE.

This chapter contains important safety and installation instructions for the Freedom SW Inverter/Charger (Freedom SW). Each time, before using the Freedom SW, READ ALL instructions and cautionary markings on or provided with the inverter/charger, the batteries, and all appropriate sections of this guide.

NOTE: The Freedom SW contains no user-serviceable parts.

The following special messages may appear throughout this bulletin or on the equipment to warn of potential hazards or to call attention to information that clarifies or simplifies a procedure.

The addition of either symbol to a "Danger" or "Warning" safety label indicates that an electrical hazard exists which will result in personal injury if the instructions are not followed.

This is the safety alert symbol. It is used to alert you to potential personal injury hazards. Obey all safety messages that follow this symbol to avoid possible injury or death.

⚠ DANGER

DANGER indicates an imminently hazardous situation, which, if not avoided, will result in death or serious injury.

⚠ WARNING

WARNING indicates a potentially hazardous situation, which, if not avoided, can result in death or serious injury.

⚠ CAUTION

CAUTION indicates a potentially hazardous situation, which, if not avoided, can result in moderate or minor injury.

NOTICE

NOTICE indicates a potentially hazardous situation, which, if not avoided, can result in equipment damage.

IMPORTANT: These notes describe things which are important for you to know, however, they are not as serious as a caution or warning.

Safety Information

⚠ DANGER

ELECTRICAL SHOCK HAZARD

- Do not expose the Freedom SW to rain, snow, spray, or bilge water. This inverter/charger is designed for marine applications only when additional drip protection is installed in certain orientations. See the installation guide for information.
- Do not operate the inverter/charger if it has received a sharp blow, been dropped, has cracks or openings in the enclosure including if the AC terminal cover has been lost, damaged, or will not close, or otherwise damaged in any other way.
- Do not disassemble the inverter/charger. Internal capacitors remain charged after all power is disconnected.
- Disconnect both AC and DC power from the inverter/charger before attempting any maintenance or cleaning or working on any circuits connected to the inverter/charger. The **INVERTER ENABLE** button on the front panel does not function like a power switch that energizes or de-energizes the unit arbitrarily. When AC and DC power sources are connected and present, the unit is always energized.
- Do not operate the inverter/charger with damaged or substandard wiring. Make sure that all wiring is in good condition and is not undersized.

Failure to follow these instructions will result in death or serious injury.

⚠ DANGER

FIRE AND BURN HAZARD

- Do not cover or obstruct the air intake vent openings and/or install in a zero-clearance compartment.
- Do not use transformerless battery chargers in conjunction with the inverter/charger due to overheating.

Failure to follow these instructions will result in death or serious injury.

⚠ DANGER

EXPLOSION HAZARD

- Charge only properly rated (such as 12 V) lead-acid (GEL, AGM, Flooded, or lead-calcium) rechargeable batteries because other battery types may explode.
- Do not work in the vicinity of lead-acid batteries. Batteries generate explosive gases during normal operation. See note #1.
- Do not install and/or operate in compartments containing flammable materials or in locations that require ignition-protected equipment. See notes #2 and #3.
- When using Lithium-Ion batteries, ensure that the battery pack being used includes a certified Battery Management System (BMS) with safety controls.

Failure to follow these instructions will result in death or serious injury.

NOTES:

1. Follow these instructions and those published by the battery manufacturer and the manufacturer of any equipment you intend to use in the vicinity of the battery. Review cautionary markings on these products and on the engine.
2. This inverter/charger contains components which tend to produce arcs or sparks.
3. Locations include any space containing gasoline-powered machinery, fuel tanks, as well as joints, fittings, or other connections between components of the fuel system.

Precautions When Working With Batteries

⚠ WARNING

BURN FROM HIGH SHORT-CIRCUIT CURRENT, FIRE AND EXPLOSION FROM VENTED GASES HAZARDS

- Always wear proper, non-absorbent gloves, complete eye protection, and clothing protection. Avoid touching your eyes and wiping your forehead while working near batteries. See note #4.
- Remove all personal metal items, like rings, bracelets, and watches when working with batteries. See notes #5 and #6 below.
- Never smoke or allow a spark or flame near the engine or batteries.
- Never charge a frozen battery.

Failure to follow these instructions can result in death or serious injury.

NOTES:

1. Mount and place the Freedom SW Inverter/Charger unit away from batteries in a well ventilated compartment.
2. Always have someone within range of your voice or close enough to come to your aid when you work near a lead-acid battery.
3. Always have plenty of fresh water and soap nearby in case battery acid contacts skin, clothing, or eyes.
4. If battery acid contacts skin or clothing, wash immediately with soap and water. If acid enters your eye, immediately flood it with running cold water for at least twenty minutes and get medical attention immediately.
5. Use extra caution to reduce the risk or dropping a metal tool on the battery. It could spark or short circuit the battery or other electrical parts and could cause an explosion.
6. Batteries can produce a short circuit current high enough to weld a ring or metal bracelet or the like to the battery terminal, causing a severe burn.
7. When removing a battery, always remove the negative terminal from the battery first for systems with grounded negative. If it is grounded positive, remove the positive terminal first. Make sure all loads connected to the battery and all accessories are off so you don’t cause an arc.

Precautions When Preparing to Charge

⚠ WARNING

EXPOSURE TO CHEMICALS AND GASES HAZARD

- Make sure the area around the battery is well ventilated.
- Make sure the voltage of the batteries matches the output voltage of the inverter/charger.
- Be careful to keep corrosion from coming into contact with your eyes and skin when cleaning battery terminals.

Failure to follow these instructions can result in death or serious injury.

NOTES:

- Study and follow all of the battery manufacturer's specific precautions, such as removing or not removing cell caps while charging, whether equalization is acceptable for your battery, and recommended rates of charge.
- For flooded non-sealed batteries, add distilled water in each cell until battery acid reaches the level specified by the battery manufacturer. This helps to purge excessive gas from cells. Do not overfill. For a battery without removable cell caps, carefully follow manufacturer's instructions.

Precautions When Placing the Inverter/Charger

NOTICE

RISK OF DAMAGE TO THE INVERTER/CHARGER

- Never allow battery acid to drip on the inverter/charger when reading gravity, or filling battery.
- Never place the Freedom SW Inverter/Charger unit directly above batteries; gases from a battery will corrode and damage the inverter/charger.
- Do not place a battery on top of the inverter/charger.

Failure to follow these instructions can damage the unit and/or damage other equipment.

Regulatory

The Freedom SW Inverter/Charger is certified to appropriate US and Canadian standards. For more information see “Regulatory Approvals” on the Specifications section in the Owner’s Guide.

The Freedom SW Inverter/Charger is intended to be used for mobile or commercial applications. This inverter/charger is designed for marine applications only when additional drip protection is installed in certain orientations.

It is not intended for other applications as it may not comply with the additional safety code requirements needed for those other applications. See “Limitations On Use” below.

⚠ WARNING

LIMITATIONS ON USE

Do not use in connection with life support systems or other medical equipment or devices.

Failure to follow these instructions can result in death or serious injury.

FCC Information to the User

This equipment has been tested and found to comply with the limits for a Class B digital device, pursuant to part 15 of the FCC Rules. These limits are designed to provide reasonable protection against harmful interference in a residential installation. This equipment generates, uses, and can radiate radio frequency energy and, if not installed and used in accordance with the instructions, may cause harmful interference to radio communications.

However, there is no guarantee that interference will not occur in a particular installation. If this equipment does cause harmful interference to radio or television reception, which can be determined by turning the equipment off and on, the user is encouraged to try to correct the interference by one or more of the following measures:

- Reorient or relocate the receiving antenna.
- Increase the separation between the equipment and receiver.
- Connect the equipment into an outlet on a circuit different from that to which the receiver is connected.
- Consult the dealer or an experienced radio/TV technician for help.

⚠ CAUTION

Unauthorized changes or modifications to the equipment could void the user’s authority to operate the equipment.

End of Life Disposal

The Freedom SW is designed with environmental awareness and sustainability in mind. At the end of its useful life, the Freedom SW can be decommissioned and disassembled. Components which can be recycled must be recycled and those that cannot be recycled must be disposed of according to local, regional, or national environmental regulations.

Many of the electrical components used in the Freedom SW are made of recyclable material like steel, copper, aluminum, and other alloys. These materials can be auctioned off to traditional scrap metal recycling companies who resell reusable scraps.

Electronic equipment such as the circuit boards, connectors, and fuses can be broken down and recycled by specialized recycling companies whose goal is to avoid having these components end up in the landfill.

For more information on disposal, contact Xantrex.

Contents

Introduction

Congratulations on your purchase of the Freedom SW Inverter/Charger (Freedom SW). The Freedom SW has been designed to give you premium power, ease of use, and outstanding reliability.

Please read this chapter to familiarize yourself with the main performance and protection features of the Freedom SW.

Materials List

The Freedom SW ships with the following items:

- One Freedom SW unit
- Owner's and Installation Guides
- Battery Temperature Sensor (BTS)
- DC terminal covers (one red, one black) with two sets of #6-32 screws
- Two Xanbus network terminators
- Two sets of 5/16"-18 nuts and washers for the DC terminals

NOTE: If any of the items are missing, contact customer service or any authorized Xantrex dealer for replacement. See "About This Guide" on page ii.

IMPORTANT: Keep the carton and packing material in case you need to return the Freedom SW for servicing.

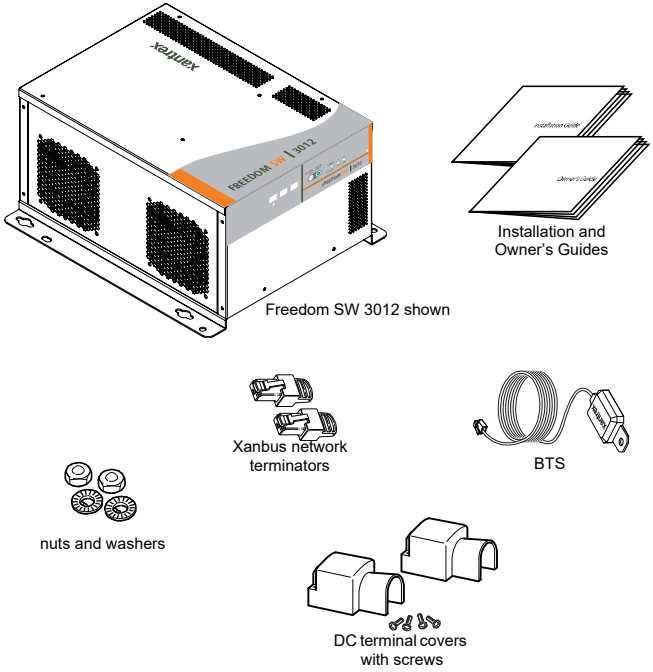

Figure 1 Materials List

Key Features

The Freedom SW Inverter/Charger is a true sine wave inverter/charger that can be used for mobile, marine and commercial applications. The Freedom SW Inverter/Chargers are designed to operate with a wide variety of generators and are capable of operating in parallel with a generator for short durations to assist with starting large loads. The Freedom SW is a convenient combination of an inverter, multistage battery charger, and transfer switch in one electronic device.

- As an inverter, the Freedom SW provides true sine wave power for your microwave, entertainment system, computer, and other loads. This power is identical to the AC source provided from the utility grid (power company).
- Some of the benefits of true sine wave power include consistent cooking in your microwave, handling of sensitive loads such as your TV set, dimmer switches, and appliances with speed controls.
- Highly versatile platform capable of series stacking for 120/240V line configurations and parallel stacking to increase power levels.
- High efficiency true sine wave output to power sensitive electrical and electronic equipment.
- Surge capacity to start difficult loads like refrigerators or A/C compressors.
- Power factor-corrected (PFC) input minimizes AC input current required for charging, increasing AC pass-through capacity.
- As a charger, it has high output, multistage charging capability minimizing charging time.
- Capable of operating from 50 Hz and 60 Hz power source by extending AC qualification frequency range. See “ACIn Settings” on page 65.

  IMPORTANT: Dual Line models require only the Line 1 Input to be energized in order to qualify AC. Line 2 Input does not have to be powered in a single phase system.
- Temperature-controlled, variable-speed internal cooling fans. The fans turn on when the internal temperature reaches 45 °C (113 °F) and reaches maximum speed at 70 °C (158 °F). The fan turns off when the internal temperature falls to 40 °C (104 °F).
- Designed with serviceability in mind via Authorized Service Centers (ASC).
- The Freedom SW Inverter/Charger is also Xanbus-enabled which allows network compatibility and communication with other Xanbus-enabled devices. See more information under “System Components” on page 7.

Key Features Explained

Built-in Charge Formulas For the unit to perform at the highest level, the batteries must be charged correctly. The Freedom SW has optimized algorithms for flooded, gel, and AGM batteries.

Battery Temperature Sensor Since battery temperature is a key factor in correct charging, the charging formula must be adjusted (automatically and in real time) according to the actual battery temperature to ensure that batteries are fully charged, but not overcharged. For this reason, a battery temperature sensor is included with your Freedom SW and has temperature compensated the charge formula.

Manual Equalization Over a period of time, the cells in a flooded battery can develop uneven chemical states. This can result in a weak (undercharged) cell which, in turn, can reduce the overall capacity of the battery. To improve the life and performance of a non-sealed, flooded battery, the Freedom SW's multistage charging cycle includes a manual equalize mode that can be used, if recommended by the battery manufacturer.

Dead Battery Charging Another feature that the Freedom SW includes is dead battery charging. The Freedom SW—unlike many chargers—has the ability to recharge batteries even if the battery voltage is very low (5 volts for Freedom SW 2012 / 3012 units and 12 volts for Freedom SW 2024 / 3024 units).

Load Management The Freedom SW has a built-in transfer relay that connects your inverter output or AC input from the utility grid or generator to your loads. Because the usual AC power sources such as campground outlets or small generators often have limited current availability, having the capability to manage your AC loads is extremely valuable. The Freedom SW provides a number of features to facilitate this:

- The charger is power factor corrected to use AC current as efficiently as possible. Minimizing the AC current used by the charger means more current is available for your AC loads.
- Freedom SW has a power share feature which prioritizes your AC loads by reducing the charge current in an attempt to limit the total input current to less than the breaker setting.

Occasionally, AC input sources have low voltage. To avoid loading these weak sources any further, the charger automatically reduces its AC current draw as the AC voltage approaches the minimum acceptable level.

Stacking

Supports stacking of two inverter/chargers to increase capacity. This also requires the installer to select a Master and Slave in order for the inverters to stack. Two configurations of stacking are supported: Parallel stacking and Series stacking.

Parallel Stacking Parallel stacking allows two inverter/chargers to operate in parallel thereby doubling the capacity in inverter mode. The two inverters communicate over the network and intelligently share the load and to balance the load between the two units. The Master Freedom SW broadcasts pulses on the Xanbus network to synchronize operation between the other paralleled unit. When AC loads are present, both units produce power, effectively sharing the load. When Search mode is enabled, only the Master unit produces the AC output.

Series Stacking Two units can be configured to generate 120/240 Split-phase power for load configurations that require both 120 and 240 volts. In this configuration, the AC source must be split-phase as well.

Stack Charging

Two Freedom SWs synchronize charging stages to ensure efficient charging of the battery bank. When a single unit transitions from bulk to absorption so do all other units. In absorption, all units must complete the absorption stage before transitioning to the next stage. Note that units do not load share when charging except during the bulk stage. The Freedom SWs stop sharing charge current just before completing the bulk stage. The units do not share charge current during the absorption and float stages.

Each unit charges batteries based on the Max Charge Rate setting and active internal (temperature-based) deratings.

If equalization is enabled on one or more devices capable of equalization charging, only those devices perform an equalize cycle after absorption. Other devices transition to float (if three-stage charging is selected) or transition to AC pass-through (if two-stage charging is selected).

Generator Assist

The Freedom SW Series of inverter/chargers can operate in tandem with a generator (or shore power) to temporarily assist power loads with large start-up demands such as air conditioners, water pumps etc. A Xanbus AGS is not required for this feature to work when shore power is present to assist the Freedom SW but the AGS is needed if a generator were to be used in assisting the Freedom SW.

When the **Gen Support** mode is enabled and the generator's or shore power's current capacity defined (in amps), the inverter will come on-line and assist the generator or shore power with starting and operating the load (drawing power from the battery). The battery bank must be well charged in order for the inverter to engage this mode. For more details, see "Gen Support" on page 67.

Basic Protection Features

The Freedom SW has the following protection features:

- Over temperature shutdown for critical components such as the transformer and the power board
- Battery temperature sensor (BTS) failure/battery temperature out-of-range fault protection
- DC output over voltage protection during charge mode
- AC transfer relay failure detection
- AC output overload and short circuit protection during invert mode
- AC backfeed[1] protection
- Short circuit protection for the BTS and communication connector ports including protection from incorrectly inserting the remote panel communication cable plug into the BTS port and vice versa

The Battery Temperature Sensor (BTS) provides these protection features:

- Battery over temperature charging protection preventing battery charging at 60 °C (140 °F) or higher
- Charging voltage compensation based on the temperature of the battery where the BTS is connected

1.An AC backfeed error occurs when the AC output of the inverter/charger is connected or routed back to the inverter/charger's AC input terminal or if the internal transfer relay fails.

System Components

The Freedom SW uses Xanbus, a network communications protocol developed to communicate the Freedom SW's settings and activity to other Xanbus-enabled devices.

You can configure and monitor the Freedom SW and every Xanbus-enabled device in the system using an optional Xanbus System Control Panel (SCP).

Another component is the optional Xanbus Automatic Generator Start (AGS) which allows operation with a wide range of generators, supported through a dedicated generator input. Simply, the AGS automatically starts and stops your generator.

The Freedom Sequence Intelligent Power Manager is a fully integrated power management system that provides automatic power and load management for use in recreational vehicles (RV) while receiving power from a generator or shore power. This device works in the background to prevent monitored AC loads from exceeding shore and generator breaker capacity.

See "Xanbus-enabled Products and Accessories" on page 9 for part numbers.

Xanbus System

The Xanbus system includes the Freedom SW and other Xanbus-enabled devices. The Freedom SW is the device in a Xanbus system that typically provides network power—500 mA at 12 volts DC. All of the Xanbus-enabled devices, such as the Freedom SW, the SCP, and the AGS are able to communicate their settings and activity to each other. See Figure 2.

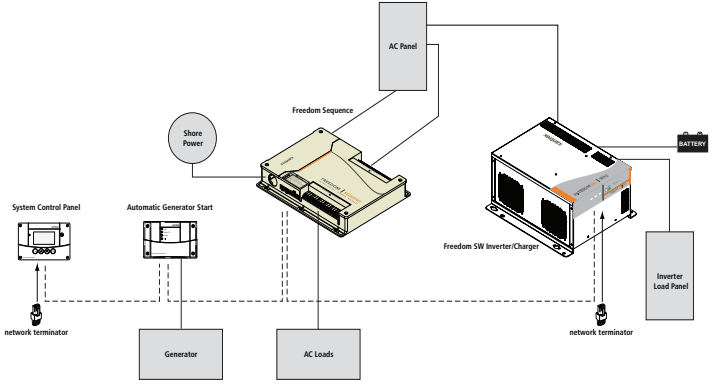

Figure 2 Typical Xanbus System Diagram

The Xanbus-enabled designation (see below) means that this product works on a Xanbus network. Xanbus-enabled products are:

- Simple to operate and routine tasks are automated.
- Controlled by software that eliminates analog signalling errors.
- Less susceptible to interference and line loss.
- Upgradable through new software releases.

xanbus
ENABLED

For detailed instructions and a complete list of Xanbus-enabled devices, visit **www.xantrex.com.**

Xanbus-enabled Products and Accessories

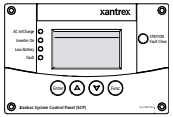

SCP

AGS

Freedom Sequence

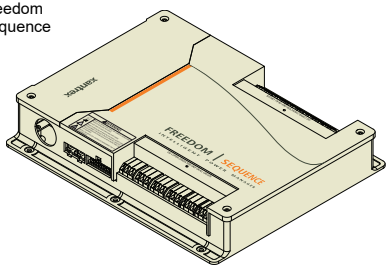

3-ft cable

25-ft cable

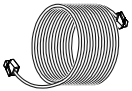

75-ft cable

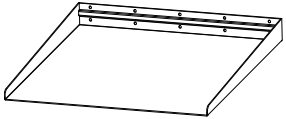

Inverter drip shield

Product/Accessory (Shown above)	Product Number/s
Freedom Sequence Intelligent Power Manager	809-0912 / 809-0913
Xanbus System Control Panel (SCP)	809-0921
Xanbus Automatic Generator Start (AGS)	809-0915
3-ft network cable (0.9 m)	809-0935
25-ft network cable (7.6 m)	809-0940
75-ft network cable (22.9 m)	809-0942
Inverter drip shield	808-9004

Product/Accessory (Not Shown)	Product Number/s
Freedom SW On/Off Switch	808-9002
GFCI receptacles (available on 12 VDC models only)	808-9003
Stacking cable	808-9005

Freedom SW Inverter/Charger Mechanical Features

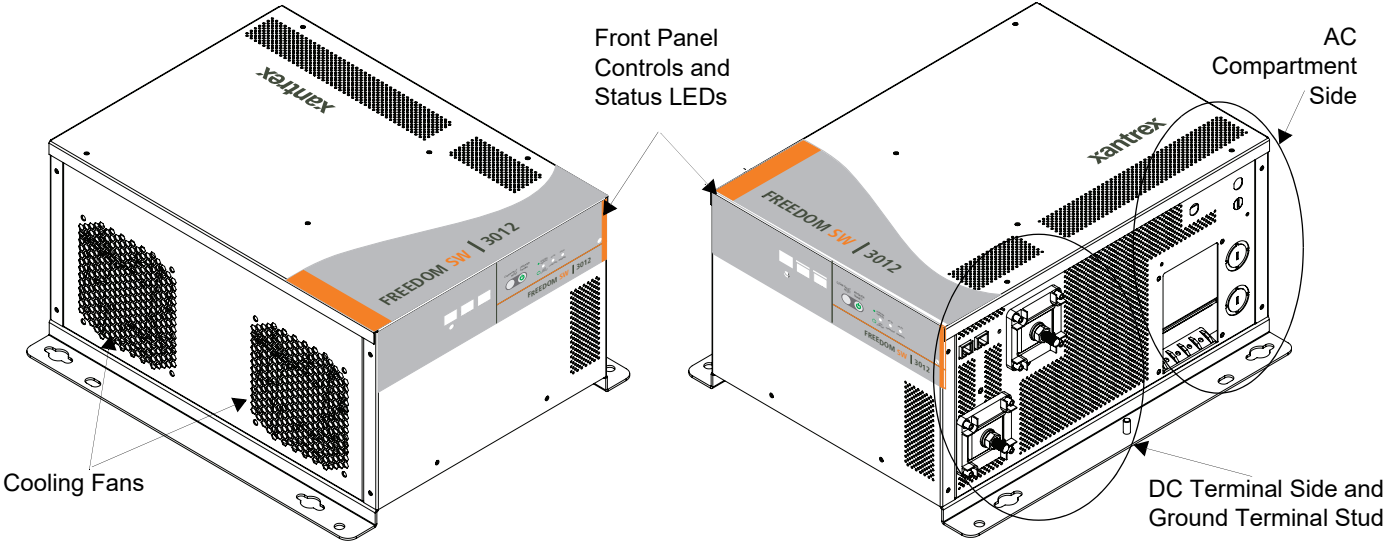

Figure 3 Freedom SW Front and Side Panels (Freedom SW 3012 shown)

Freedom SW Front and Side Panels

Before you begin to operate the Freedom SW, review the front panel features shown in Figure 4 and described in the next table. A detailed view of the LEDs and buttons on the front panel is shown in Figure 5 and described in the table next to it.

Item	Description
1	Front Panel contains the Xanbus interface ports for connecting Xanbus-enabled devices, the **INVERTER ENABLE** and **CLEAR FAULT RESET** buttons, as well as various status LEDs. See Figure 5.
2	**Mounting holes** are used for mounting the unit. A total of eight holes are provided on the unit.
3	**Two variable-speed cooling fans** are used to cool the unit. Fan speed control is based on internal temperature of critical components. The two cooling fans draw airflow into the inverter around the transformer and power compartments of the unit then exhaust through the other vents. Ensure at least 3 inches (76 mm) of clearance for proper ventilation.

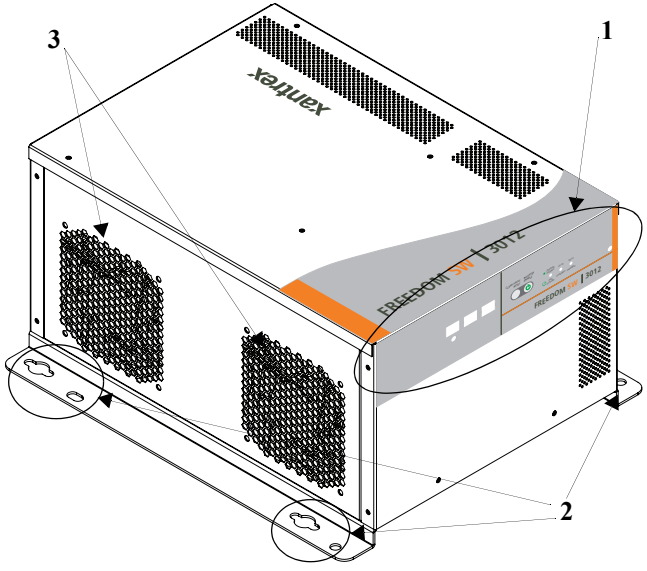

Figure 4 Isometric View of the Front Panel and Fans

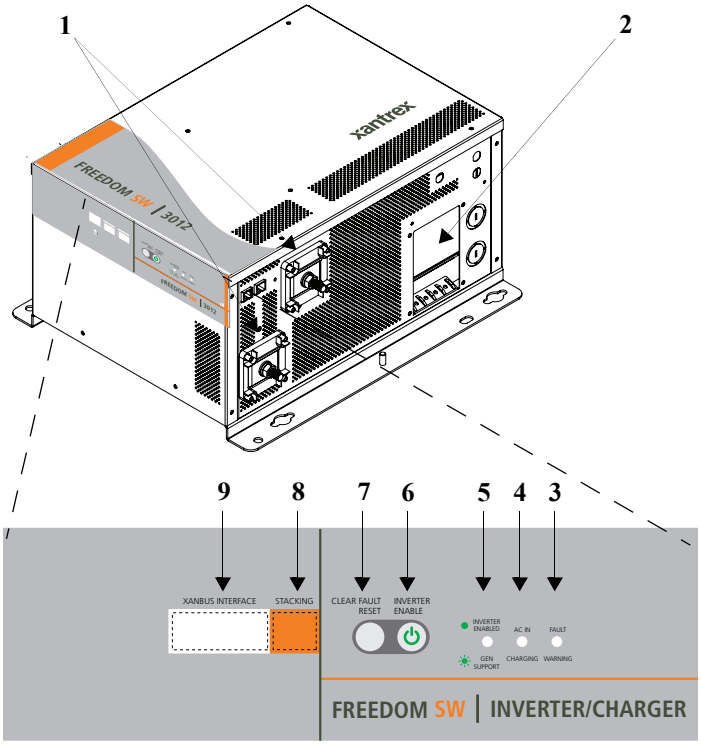

Item	Description
1	DC terminals.
2	**AC wiring compartment access panel** with compartment cover on.
3	**FAULT** LED turns on solid if a fault condition occurs and flashes intermittently when a **WARNING** condition is active.
4	When AC is present and qualified, the **AC IN** LED will turn on solid indicating also that AC is passing through. **CHARGING** LED flashes intermittently when the Freedom SW is in charge mode and is producing DC output to charge your batteries.
5	**INVERTER ENABLED** indicates the invert mode is enabled. This is different from the inverter being “on”. When enabled the inverter can be on or off. When disabled, the inverter is always off. If AC is present and invert mode is enabled, this LED remains illuminated even though AC power is being passed through. **GEN SUPPORT** LED flashes intermittently when the inverter is in generator support mode and is assisting the generator.
6	**INVERTER ENABLE** button is used to enable or disable the inverter.

Figure 5 Isometric View of the Front Panel and AC/DC Side Panel

Item	Description
7	**CLEAR FAULT RESET** button is used to clear any active faults if pressed momentarily. If held down for more than three seconds, the unit will reset (reboot) itself.
8	**STACKING** port is used to connect two inverter/ chargers together for stacked operation. This is required only for stacking in series.
9	**XANBUS INTERFACE** ports are used to connect Xanbus-enabled devices including the optional SCP and AGS.

Freedom SW AC and DC Side Panels

The DC side of the Freedom SW has the equipment ground lug, the positive (+) battery terminal, and the negative (-) battery terminal plus the remote network com port and battery temperature sensor com port.

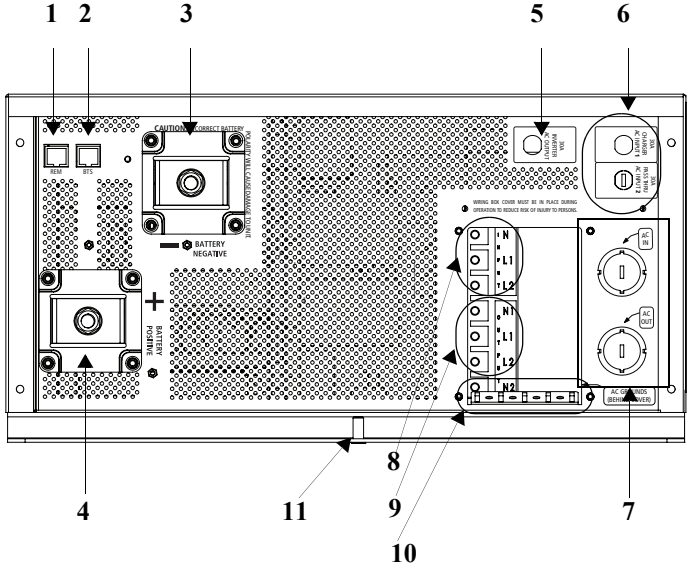

Figure 6 AC and DC Side Panel

Item	Description
1	**Remote (REM)** jack provides connection for the Freedom Sine Wave remote panel.
2	**Battery temperature sensor (BTS)** jack provides connection for the battery temperature sensor (supplied).
3	**Negative (–) DC terminal** (black). Use a qualified personnel for connecting cables.
4	**Positive (+) DC terminal** (red). Use a qualified personnel for connecting cables.
5	**AC Output circuit breaker** reset button
6	**AC Input circuit breakers** reset buttons. See “Shore (Shr) setting” on page 29 and “AC In Breaker” on page 52.
7	**AC knockouts** provide access for AC cables (both input and output wiring).
8	**AC Input** screw-type **terminal block**. Use a qualified personnel for connecting wires.
9	**AC Output** screw-type **terminal block**. Use a qualified personnel for connecting wires.
10	Ground terminals along the tab at the bottom of the opening to the AC wiring compartment access panel. Use a qualified personnel for connecting wires.
11	**Chassis ground lug** connects the chassis of the Freedom SW to your system’s chassis grounding point. Use a qualified personnel for connecting wires.

Freedom SW Supplied Accessories

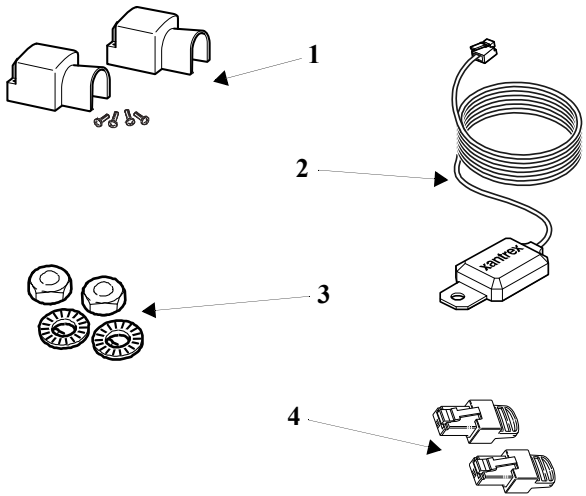

Figure 7 Supplied Accessories

NOTE: If any of the supplied accessories are missing, contact customer service or any authorized dealer for replacement.

Item	Description
1	Two DC terminal covers are supplied to prevent accidental contact with the DC cable connectors after installation. The red cover is for the positive cabling terminal, and the black cover is for the negative cabling terminal.
2	**BTS**, the Battery Temperature Sensor consists of: **Connector** plugs into the BTS jack on the Freedom SW. **Sensor cable** is 25 feet (7.6 meters). **Sensor** can be mounted on the side of the battery case or on the negative battery terminal. **NOTE**: The BTS continuously measures the temperature of the battery and adjusts the charger output for a more accurate, temperature-compensated charge.
3	**Two sets of nuts and washers** are used to secure DC cable ends to the DC terminals.
4	**Two Xanbus network terminators** are used to properly terminate each of the two ends of the daisy-chained Xanbus network. For example, if the Xanbus SCP is connected to the inverter/charger, one terminator will be plugged to the SCP, one network cable will connect both devices, and one terminator will be plugged to the inverter/charger. **IMPORTANT**: The Xanbus SCP may perform erratically if the Xanbus network is not properly terminated.

Start Up Behavior

When the Freedom SW is powered up or has been reset, all of the front panel LEDs turn on and remain on for a minimum of five seconds. During this interval, the fans are also turned on as the unit executes internal diagnostics.

Out of the box from the factory, when the Freedom SW is powered up (that is, when AC and DC power sources are connected) for the first time, the inverter function is disabled by default. After powering up, the **INVERTER ENABLE** button (or the "Up" button on the SCP) can be used to enable or disable inverter function. See "Inverter Operation Using the Front Panel" on page 18 and "Enable/disable inverter function (`EnInv`/`DsInv`)" on page 29.

Storing Inverter State Feature You can enable or disable a feature called `StoreInvState` which, when enabled remembers the state of the inverter function prior to a power down (that is, when AC and DC power sources are disconnected) or prior to a Standby (Power Save) mode. When the Freedom SW is powered up again or put back on Operating mode, the inverter function reverts back to its prior state. See "To store the state of the inverter to memory:" on page 76. This feature is disabled by default.

This feature is available only to Freedom SW 2024 (PN: 815-2024).

Enable versus Disable When a function is enabled, it is allowed to occur but other conditions may have to be met before the function actually works. For example, the charger function on the Freedom SW may be enabled, but will not charge the battery unless qualified AC power is present. For more information, see "Enabling a function" and "Disabling a function" on page 24.

IMPORTANT: Review the "Important Safety Instructions" on page iii before operating the inverter/charger.

Inverter Operation Using the Front Panel

IMPORTANT: Review the "Important Safety Instructions" on page iii before operating the inverter/charger.

Once the inverter/charger is installed, you can operate it in invert mode.

To operate in invert mode from the front panel:

1. Press the **INVERTER ENABLE** button on the Freedom SW on the front panel. The **INVERTER ENABLED** LED turns on and connected loads will be energized.
2. Note that if AC is present and being passed through, the **INVERTER ENABLED** LED will still turn on to indicate inverter mode has been enabled. However, AC will continue to be passed through to the loads until conditions exist that cause AC to be disqualified, in which case the unit will transition to invert mode and power up critical loads.
3. Connect AC input power.
   The charger automatically starts up when qualified AC power is connected.
   To operate the inverter with the System Control Panel, refer to "Operating the Freedom SW with the SCP" on page 23.
4. Disconnect AC power from inverter input by opening the breaker or disconnect.
5. Place a load on the inverter. For example, plug a 100-watt light bulb into an outlet that the inverter is powering. Press the **INVERTER ENABLE** button on the Freedom SW. The **INVERTER ENABLED** LED turns on. The inverter should run the load using battery power.
6. To test the charger, reconnect the AC input power to allow AC to the AC input. The AC In/Charging LED should start flashing after a brief delay. Any AC loads previously powered by the inverter will also work at this time.
   NOTE: On dual input models, only AC Input L1 needs to be powered for the unit to operate.
7. Remove the AC input power. The inverter/charger should transfer to invert mode immediately. (The transfer relay will make a clicking sound and the **INVERTER ENABLED** LED will turn on.) Loads should continue to operate uninterrupted.

If any part of this test fails, determine the cause before using the unit.

8. Monitor the Freedom SW Front Panel.

   The indicator LEDs on the front panel show you the operating status of the Freedom SW. A description of the LEDs is provided in Table 1.

   If none of the front panel LEDs are on, see “Troubleshooting” on page 87.

Table 1 Front Panel LEDs

LED Label	Color	Status	Action (or Status Item)
Inverter ENABLED	Steady Green	If utility and generator AC is unavailable and operating conditions are met, the Freedom SW will produce AC voltage to power loads.	You can run your appliances from the inverter.
Gen Support	Flashing Green	The inverter is assisting a generator in powering loads.	You can run your appliances from the inverter.
AC IN	Steady Green	When the Freedom SW is connected to a qualified AC source or a generator, the AC IN LED turns on.	You can run your appliances from an AC source like the utility grid or a generator.
Charging	Flashing Green	Freedom SW is connected to a qualified AC source, is charging and passing power to AC loads.	Your battery bank is being replenished and AC loads are receiving power.
Fault	Steady Red	A fault condition was detected on the network.	Investigate and clear the fault condition.
Warning	Flashing Red	A warning is detected.	Investigate by examining warning logs on SCP.

Faults and Warnings A fault affects the operation of the unit. A manual fault requires user intervention by clearing the condition and then pressing the **CLEAR FAULT RESET**

button on the inverter/charger's front panel. See the *Xanbus System Control Panel Owner's Guide* for information on clearing faults from the SCP.

A warning alerts you to a condition that could possibly affect operation of the unit.

IMPORTANT: If you are having problems with any of your loads, refer to "Inverter Applications" on page 88.

Operating Limits for Inverter Operation

Temperature The Freedom SW series of inverter/chargers will operate at rated power continuously at 30 °C with some models capable of continuous operation at much higher ambient temperature. However, the continuous power rating at elevated ambient temperature may differ between models. See "Specifications" on page 105 for full details. In higher ambient temperatures, if the loads draw full power for an extended period of time, the unit may shut down to protect itself against overheating.

The Freedom SW series of inverter chargers feature a surge rating of 200% of rated power for five seconds at 25 °C. Operating the inverter/charger in conditions outside of power and temperature limits, however, will result in thermal shutdown and/or significantly decreased performance. In addition, operation in this range is outside the ratings covered by the regulatory approvals of the product.

Difficulty on starting loads The inverter/charger should be able to operate all AC loads rated at or below its power rating. Some high horsepower induction motors used in pumps and other motor-operated equipment require very high surge currents to start, and the inverter/charger may have difficulty starting these loads.

If you have problems starting certain loads, ensure that:

- Battery connections are tight and clean.

- DC cabling is no longer than the recommended length. Refer to the *Freedom SW Sine Wave Inverter/Chargers Installation Guide* for this information.
- AC wiring is of recommended size. Refer to the *Freedom SW Sine Wave Inverter/Chargers Installation Guide* for this information.
- Battery is of sufficient capacity and is fully charged.

NOTE: Many 24 V inverter battery banks have a capacity between 200–400 Ah and 12 V inverter battery banks have a capacity between 400–800 Ah. Refer to the *Freedom SW Sine Wave Inverter/Chargers Installation Guide* for sizing requirements.

Operating Limits for Charger Operation

By default, the maximum charger output current is the rated charger output current for the particular model. Using the SCP, you can reduce the total output if you change the maximum charge rate (**`Max Chg Rate`**) on the Freedom SW Basic Settings menu or Inverter Settings menu under Advanced Settings.

The charger can operate within an AC input range of 95–135 volts. The default settings are **`95`** and **`135`**, which are the **`ACIn Lo Volt`** and **`ACIn Hi Volt`** respectively. The **`ACIn Lo Volt`** setting has a range of **`78`**–**`115`** volts and the **`ACIn Hi Volt`** setting has between **`125`**–**`140`** volts.

AC Frequency The charger can also be configured to accept and operate from a wide AC source frequency of 40–68 Hz. Therefore, the Freedom SW can charge your batteries even when incoming AC voltage is less than ideal. The default settings are **`45`** and **`55`** Hz, which are the **`ACIn Lo Freq`** and **`ACIn Hi Freq`** settings respectively.

Power sharing The Freedom SW charger uses incoming AC or shore power (see following note) to charge the batteries. The charger shares incoming AC power with AC loads on Line 1 only. The AC loads have priority, which means that the charger will reduce its output with large AC

loads and increase the output again when the AC load decreases. The regulatory maximum for continuous AC loads is 80% of the breaker rating (see "**AC1 Breaker**" on page 51) that the loads are connected to. The Freedom SW senses pass-through current going to the AC load. The difference between the pass-through (load) and 80% of the **AC1 Breaker** setting is the current that is available for charging the batteries.

For example, if the AC input of the Freedom SW is from an AC panel with a 30-amp breaker, the **AC1 Breaker** setting on the SCP should be selected as **30** amps. Based on this, the charger will control the charge current so that the total current draw is equal to or less than 24 amps in this case. Should the load current be more than 24 amps, the charger output will reduce to 0 amp, but the Freedom SW will continue to supply the loads. The Freedom SW will continue to pass-through power to the loads, even if the load current exceeds the **AC1 Breaker** setting. In this case, it will be up to the user to remove/disconnect loads if tripping the AC input breaker supplying the Freedom SW is to be avoided.

NOTE: The **AC1 Breaker** setting can also be changed using the **Shr** soft key in the SCP (see "Soft Key Navigation" on page 29). **Shr** stands for shore power which refers to incoming AC power in the mobile industry.

Operating the Freedom SW with the SCP

This section contains detailed information and procedures for using your Freedom SW in conjunction with the System Control Panel (SCP).

If you're using the SCP to operate or monitor the status of the unit, you may also refer to the *Xanbus System Control Panel Owner's Guide*.

⚠ WARNING

LIMITATIONS ON USE

Do not use in connection with life support systems or other medical equipment or devices.

Failure to follow these instructions can result in death or serious injury.

The SCP provides operating, configuration, and monitoring capability for your Xanbus system.

The SCP:

- Monitors activity throughout your onboard power system.
- Displays the latest information about your inverter/charger, battery voltage level, battery charge output, and generator start and stop activity.
- Displays the settings for each Xanbus-enabled device in the system.
- Enables you to adjust the settings for each Xanbus-enabled device in the system.
- Preserves all of its settings if system power is interrupted. After power is restored, you don't have to reconfigure the SCP or any of the Xanbus-enabled devices connected to it.

This section provides information on operating the Freedom SW with the SCP. Please refer to the System Control Panel Owner's Guide for complete information on using the System Control Panel.

Using the Xanbus SCP

As shown in Figure 8, the SCP has these important features:

Display screen System information is shown on the display screen with an adjustable backlight.

Indicator LEDs Four indicator LEDs on the front panel indicate the operating status of the Xanbus system.

Push buttons Four push buttons allow you to select device menus and change or display settings. The red **STBY/ON Fault Clear** button toggles the SCP and Xanbus-enabled devices between Operating mode and Standby (Power Save) mode, if held down for more than five seconds. The button can also be used to clear any active faults or warnings by momentarily depressing the button.

System Control Panel

The Xanbus System Control Panel (SCP) provides configuration and monitoring capability for all Xanbus-enabled devices on the network. All changes to the configuration of the Freedom SW are made with the SCP.

The front panel of the Freedom SW provides limited control, including reset; charger enable and disable; and inverter enable and disable.

Enabling a function When a function is enabled, it is allowed to occur but other conditions may have to be met before the function actually works. For example, the charger function on the Freedom SW may be enabled, but will not charge the battery unless qualified AC power is present.

Disabling a function When a function is disabled, it is not allowed to occur and if it is already occurring, it is terminated immediately. Regardless of other conditions, the function will not work. For example, even if AC power is present, if the charger function is disabled, the Freedom SW will not charge the battery.

NOTE: All functions on the front panel can also be controlled from the SCP.

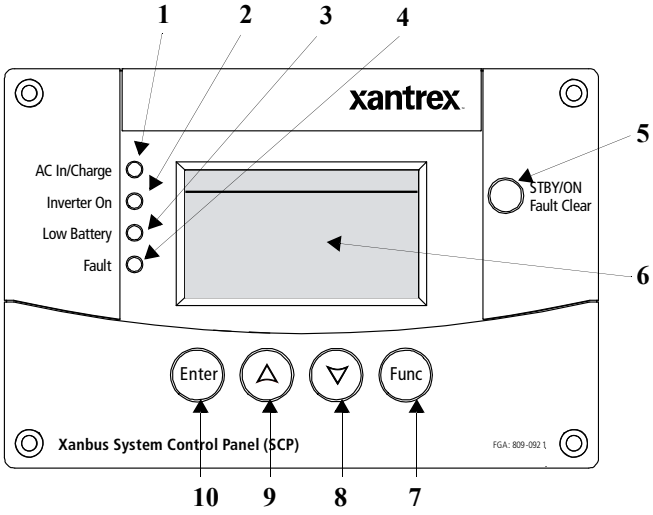

Figure 8 Xanbus System Control Panel (SCP)

Item	Description
1	**AC In/Charge** LED indicates that qualified AC is present at the input of an inverter/charger. When the Freedom SW is connected to a qualified AC source like the utility grid or a generator, this LED on the SCP turns on.
2	**Inverter On** LED turns on when the Freedom SW is inverting using battery power.
3	**Low Battery** LED turns on when the battery voltage on the Freedom SW is low.
4	**Fault** LED indicates a detected condition that requires user attention and intervention. The Fault LED turns on when any Xanbus-enabled device connected to the network detected a fault. See “Detected Fault Types” on page 90 for the definitions of a fault and warning.
5	**STBY/ON Fault Clear** button is used to clear active faults on the system if pressed momentarily. It also toggles all Xanbus-enabled devices on the system between Operating and Standby (Power Save) mode when held down for more than five seconds. See “Inverter Operation Using the Front Panel” on page 18.

Item	Description
6	Screen displays menus, settings, and system information. Displays a menu screen title, four lines of menu items, and a line that contains small arrows that depict pointers to SCP buttons.
7	**Func** button: Cancels selection of a menu item. Returns you to the previous screen. Changes the functions of the Up and Down arrow buttons.
8 (and 9)	Down (and Up) arrow buttons: Scrolls down (up) one line of text. Decreases (increases) a selected value. When the **Func** button is pressed to select: "Shr" - the down (and up) arrow buttons increment (decrement) shore power breaker capacity on a Freedom SW inverter/charger[a]. "AGS" - the down (and up) arrow buttons switch between different AGS Start modes (Auto, Manual-On, Manual-Off). "Home" - the down (and up) arrow buttons enable or disable the inverter. See "Soft Key Navigation" on page 29 for more information.
10	**Enter** button: Confirms selection of a menu item. Moves you to the next screen.

a. If the Freedom Sequence power manager is installed in the power system, the shore breaker capacity on the power manager is adjusted but not the inverter/charger.

SCP Navigation

Startup Screen

This screen is shown when the Xanbus SCP first receives power from the Xanbus network.

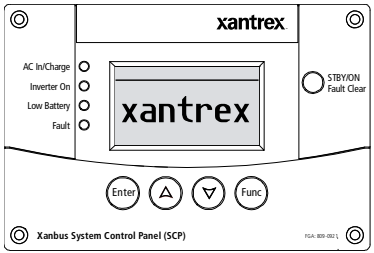

Figure 9 Startup Screen

Viewing the SCP Home Screens

The top level screens on the Xanbus SCP are the startup screen, the `System Status` screen (Figure 10) and the device `Home` screen. After power is applied and the startup screen appears, the Xanbus SCP displays the `System Status` screen. You can view the device `Home` screen for the Freedom SW and other devices in the system by pressing the up and down arrows.

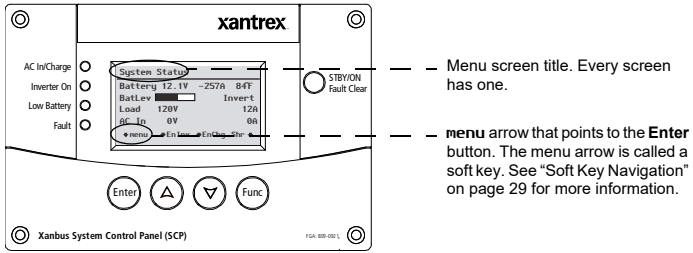

Figure 10 System Status

System Status Screen The `System Status` screen appears after the startup screen. It displays aggregated status information for the entire power system. For example, a single system might have two Xanbus network-connected Freedom SWs, one Xanbus AGS module, and one Xanbus SCP all connected to a single battery bank.

The **System Status** screen always features a **menu** arrow pointing to the **Enter** button. Pressing **Enter** takes you to the **Select Device** menu screen. For more information, see “Reading the System Status Screen” on page 33.

IMPORTANT: If you are uncertain which Xanbus SCP menu screen you are viewing, you can return to the starting point—the **System Status** screen—by pressing the **Func** button repeatedly until the screen stops changing.

Select Device Screen As mentioned, this screen appears when the **Enter** button is pressed from the System Status screen. It lists all Xanbus-enabled devices including options to select System Settings and Clock.

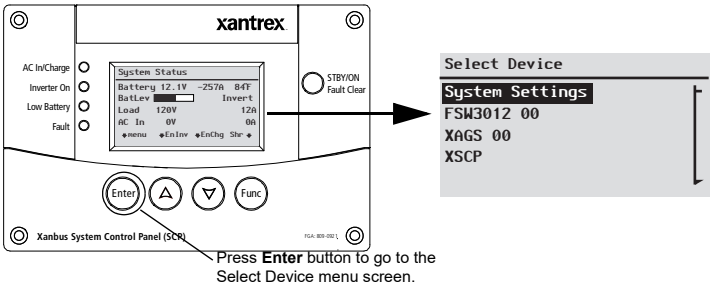

Figure 11 Freedom SW Select Device Screen

To display the Select Device menu:

◆ While viewing the **System Status** screen, press **Enter**.

Device Setup Screen The Device Setup screen is shown when a Xanbus-enabled component is selected from the Select Device screen. For example, below is an example of a Device screen for the Freedom SW 3012 inverter/charger. **Device Setup** menus display status information and changeable settings. Changeable settings are identified by the square brackets [ ] around values in the right-hand column.

To display the Setup menu for a device:

◆ Highlight the device name on the **Select Device** menu screen and press **Enter**.
-Or-
From the device **Home** screen, press **Enter**.

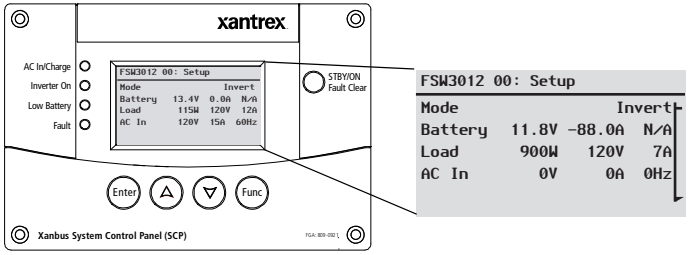

Figure 12 Freedom SW Device Screen

Soft Key Navigation

Soft keys are the objects on the fifth line of the System Status screen. The soft keys have arrows that point to a corresponding physical button such as the **Enter**, Up arrow, Down arrow, and **Func** buttons. They are called as such because they perform functions in conjunction with pressing the corresponding SCP button that each arrow points to.

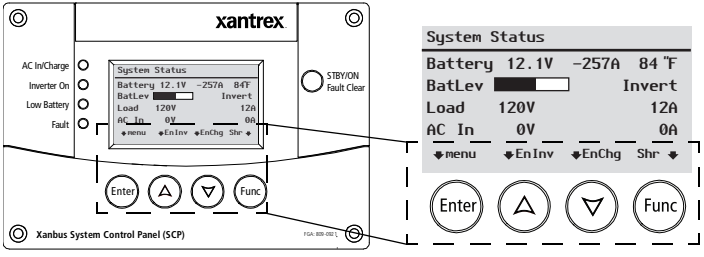

Figure 13 Soft Keys

In the next page, it will show how to navigate the soft keys to:

- Enable/disable inverter function (`EnInv`/`DsInv`)
- Enable/disable charger function (`EnChg`/`DsChg`)
- Change shore breaker ratings (`Shr`) - see also "`AC In Breaker`" on page 52
- Select AGS trigger modes (`AGS`)

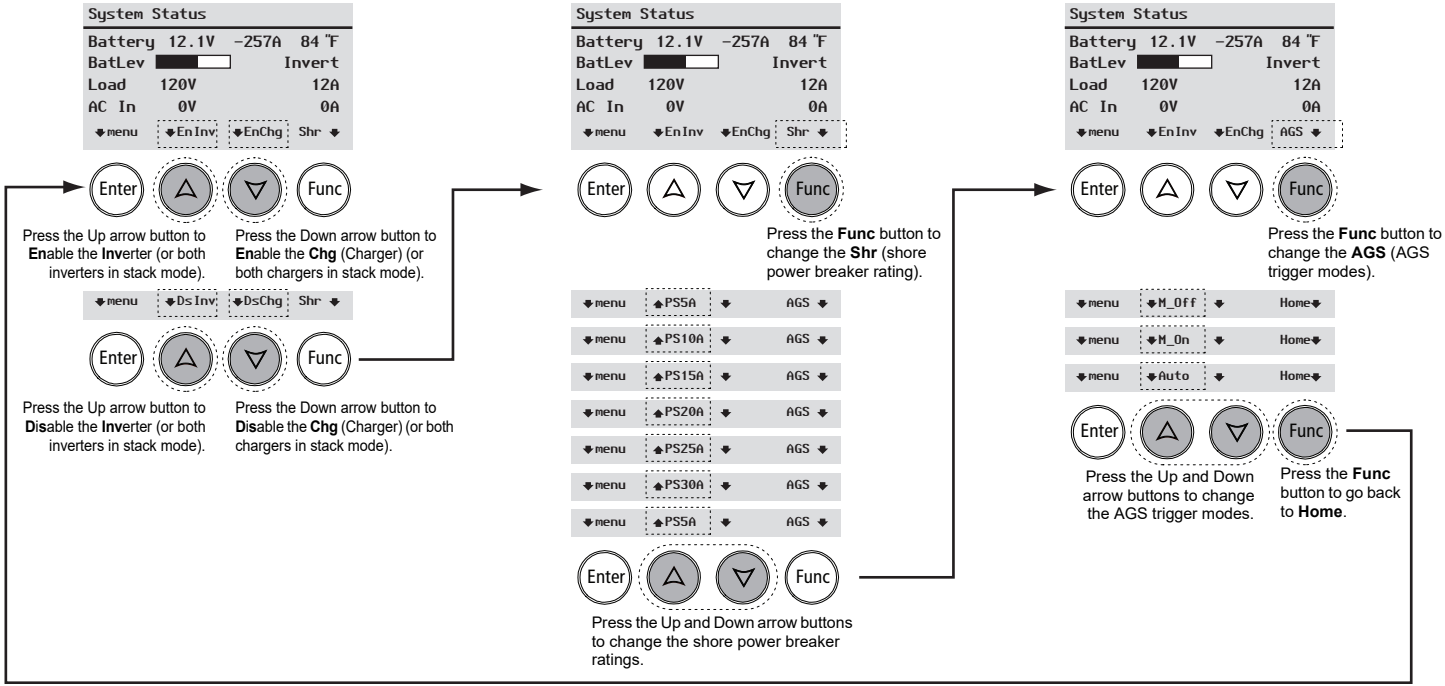

Figure 14 Freedom SW System Status Screen - Soft Key Navigation

Viewing the Firmware Revision Number

You may need to view the firmware revision number (**F/W Rev.**) of the Freedom SW when troubleshooting the unit with authorized service personnel.

To view the firmware revision number:

1. From the **System Status** screen, press the **Enter** button.
   The **Select Device** menu screen appears.
2. From the **Select Device** screen, press the **Enter** button.
   The **System Settings** menu screen appears.
3. From the **System Settings** screen, press the down arrow button to highlight **View Device Info**
4. Press **Enter**.
   The **Device Info** screen appears.
5. Read the displayed information.
   The series of numbers and letters opposite **F/W Rev.** is the firmware revision number.
6. Press **Func** (3x) to return to the **System Settings** menu.

To view the F/W Rev. from the System Status screen:

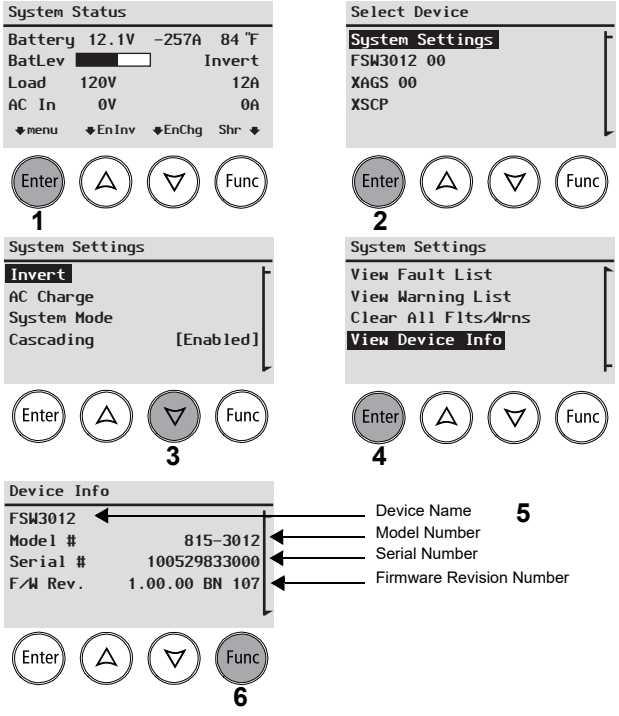

Setting the Time and Date

Freedom SW advanced features such as time-stamped events (faults, warnings, and logged historical data) require that the system be set to the correct time. The Xanbus SCP has an internal clock that controls the time for all Xanbus-enabled devices in the system. You can set the time, time format, and date on the **`Clock`** menu. The **`Clock`** menu is accessible on the **`Select Device`** menu.

For more information, see refer to the *Xanbus SCP Owner's Guide*.

Using the STBY/ON Fault Clear Button

The **STBY/ON Fault Clear** button has two functions.

The **STBY/ON Fault Clear** is used to clear active faults on the system if pressed momentarily. It also toggles all Xanbus-enabled devices on the system between Operating and Standby (Power Save) mode when held down for more than five seconds.

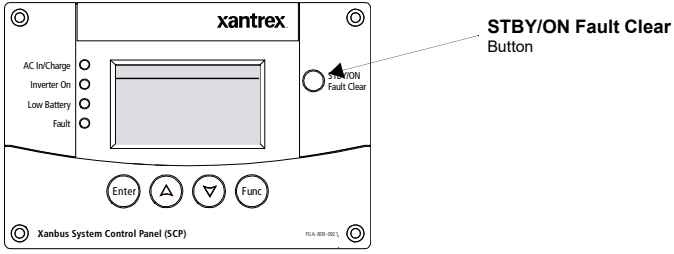

Figure 15 Xanbus SCP **STBY/ON Fault Clear** Button

Reading the System Status Screen

The `System Status` screen displays:

- Battery-related information (see Line 2)
- Battery level and inverter/charger operating state (see Line 3)
- Load information (see Line 4)
- AC Input information (see Line 5)

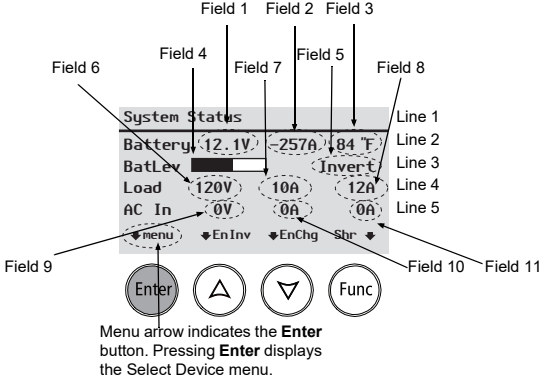

Table 2 System Status Screen

Line 1	**Label**: "`System Settings`"
Line 2	**Label**: `Battery` **Field 1**: Total battery current. Negative value if the battery is discharging and positive value when charging. **Field 2**: Battery voltage **Field 3**: Battery temperature[a]. Also, displays the highest temperature between stacked inverters that are installed.
Line 3	**Label**: `BatLev` **Field 4**: Displays a bar graph showing the approximate battery level. **Field 5**: Freedom SW inverter/charger operating state
Line 4	**Label**: `Load` **Field 6**: Inverter output voltage at load terminals of the inverter/charger. Voltage is reported by the Master unit if more than one inverter/charger is installed. **Field 7**: Master current[b] **Field 8**: Sum of all load current from both inverter and charger. Also, it displays Slave (or L2 Master) current[d].

Table 2 System Status Screen

Line 5	**Label**: AC In **Field 9**: AC input voltage at AC In terminals of the inverter/charger. Voltage is reported by the Master unit if more than one inverter/charger is installed. **Field 10**: Master current[b] **Field 11**: Sum of all L1 AC input current[c] from both inverter and charger. Sum of all load current from both inverter and charger. Also, it displays Slave (or L2 Master) current[d].

a. The unit of temperature can be changed in the SCP Config menu screen.
b. When in a stacked inverter configuration.
c. Only L1 AC input is taken into account. L2 AC input current is not included in the sum in Freedom SW inverter/charger models where there is L2 AC input.
d. In a single unit setup, the Slave (or L2 Master) will display 0A all the time mainly because of the absence of a second unit. If two units are stacked, the Master and Slave (or L2 Master) current will display the appropriate current values.

Reading the Freedom SW Device Setup Screen

The Freedom SW Device **`Setup`** menu screen displays real-time operational data (status information) specific to the Freedom SW. The Freedom SW status changes according to the states described in Table 4, “Freedom SW Device Setup Screen Operating States (Modes)” on page 37.

The Freedom SW Device **`Setup`** menu screen has two segments. The first segment (lines 2 to 5) displays status information and appears first in the screen’s initial four lines. The second segment (lines 6 to 15) contains selectable fields when the Down arrow button is pressed (scrolling down the device setup screen). These selectable fields are configurable, meaning their values can be changed from within the setup screen or they bring up another screen (another level of configuration). For information on how to configure the Freedom SW inverter/charger, see “Configuring the Freedom SW using the SCP” on page 39.

To view the Freedom SW `Setup` menu screen:

1. On the **`Select Device`** screen, press the Down arrow button until the **`FSW3012 00`**[1] is highlighted.
2. Then, press **Enter** to display the **`FSW3012 00: Setup`** screen which is the device setup menu screen.
3. Press the Up and Down arrow buttons view status information fields and move between selectable fields.

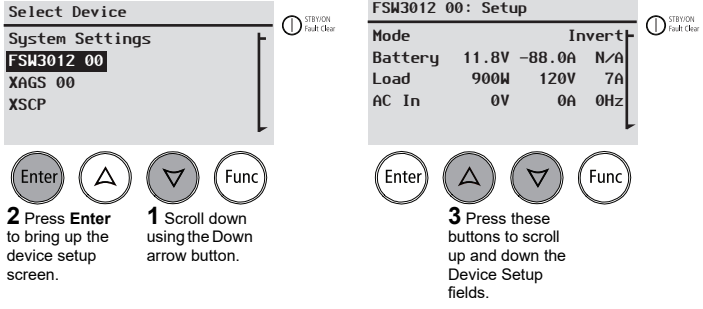

1.Typical device ID for a single installed Freedom Inverter/Charger. The second unit has a device name **`FSW3012`** is followed by **`01`**.

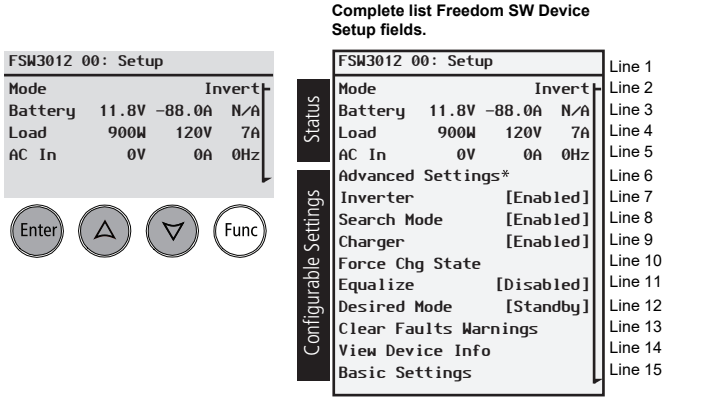

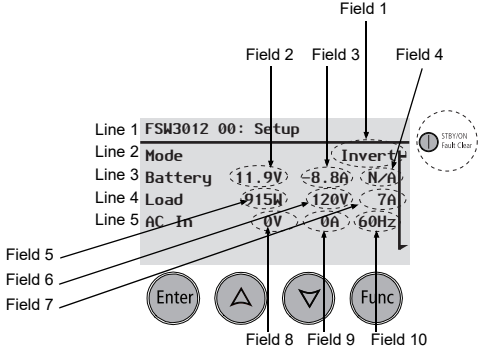

Table 3 Device Setup Screen Status Information

Line 1	**Label**: "`FSW3012 00: Setup`"
Line 2	**Label**: `Mode` **Field 1**: Freedom SW operating mode or "operating state" (see Table 4 on page 37).
Line 3	**Label**: `Battery` **Field 2**: Total battery current. Negative value if the battery is discharging and positive value when charging. **Field 3**: Battery voltage **Field 4**: Battery temperature. Displays the highest temperature when reading two inverters that are installed. Displays `N/A` when there is no BTS attached.
Line 4	**Label**: `Load` **Field 5**: Total power drawn by AC loads connected to the unit. **Field 6**: Inverter output voltage at load terminals of one inverter/charger unit. **Field 7**: Sum of all current drawn out by the AC loads.

Table 3 Device Setup Screen Status Information

Line 5	**Label**: `AC In` **Field 8**: AC input voltage at AC In terminals of the inverter/charger. **Field 9**: Sum of all current drawn into one inverter/charger unit. **Field 10**: AC input frequency
STBY/ON Fault Clear button	Press momentarily to clear all faults on all devices on the network. Press and hold for five seconds to switch all devices in the network between operating and standby modes.
Enter, **Up arrow**, **Down arrow** buttons (pressed simultaneously)	Switches between Basic Settings and Advanced Settings.

Table 4 Freedom SW Device Setup Screen Operating States (Modes)

State (Mode)	Displayed When...
`Invert`	The Freedom SW is supplying power to loads by inverting power from the batteries. AC input from the utility or generator is absent or out of nominal range.

Table 4 Freedom SW Device Setup Screen Operating States (Modes)

State (Mode)	Displayed When...
`Qualifying AC`	The Freedom SW is determining if AC input is within a usable voltage and frequency range. `Qualifying AC` is also displayed when the Freedom SW is awaiting application of AC power or a command to enable invert mode.
`Charging`	The Freedom SW is charging the batteries from qualified AC input from the utility grid or a generator. The charge state is in transition to either bulk, absorption, float, or equalize. AC input is also passed through to the load while charging.
`Bulk`	The Freedom SW is bulk charging the batteries from qualified AC input from the utility grid or a generator. AC input is also passed through to the load while bulk charging.
`Absorption`	The Freedom SW is absorption charging the batteries from qualified AC input from the utility grid or a generator. AC input is also passed through to the load while absorption charging.

Table 4 Freedom SW Device Setup Screen Operating States (Modes)

State (Mode)	Displayed When...
`ABS Finish`	One Freedom SW unit has completed the absorption stage and is waiting for other Freedom SWs in the system to complete absorption. This status can occur only when there is another Freedom SW also charging the battery.
`Float`	The Freedom SW is float charging the batteries from qualified AC input from the utility grid or a generator. The Freedom SW is set for three-stage charging. AC input is also passed through to the load while float charging.
`Fault`	The Freedom SW has an active fault. The Fault/ Warning LED on the Xanbus SCP is on.
`Gen Support`	There is AC input from the generator, and the Freedom SW is supporting the generator by supplying additional power to the critical loads. See “Gen Support” on page 67.
`Search`	Search mode is enabled and the Freedom SW is standing by, waiting to begin inverting. See “Changing Configurable Settings From The Device Setup Menu Screen” on page 42.
`Passthru`	The AC connected to the AC1 or AC2 input is passing directly through the Freedom SW to the loads. The batteries are not being charged in this state.
`Equalize`	Equalization has been turned on and the Freedom SW is equalizing the batteries after completing a full charge cycle.

Configuring the Freedom SW using the SCP

This section contains information about all configurable settings and procedures for the Freedom SW.

It provides information on using the SCP to configure the Freedom SW settings for optimal performance. Please refer to the *Xanbus System Control Panel Owner's Guide* for detailed information on how to use the SCP.

System Menu Map

Figure 16 provides a map of how the SCP screens and menus are organized. The order of devices appearing on the SCP will vary, depending on the order in which they've been connected to the network.

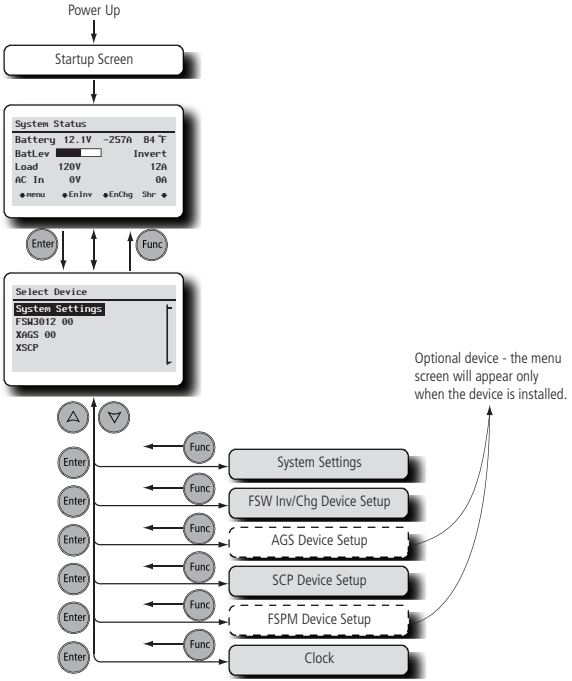

Figure 16 SCP System Menu Map

Viewing the System Status Screen

The System Status screen displays system activity. The information appearing on the System screen varies with the status of the inverter/charger. See “Reading the System Status Screen” on page 33. Go back to “Reading the Freedom SW Device Setup Screen” on page 35 for an explanation of the different states of the inverter/charger. For example, Figure 17 shows the Freedom SW in the bulk stage of charging.

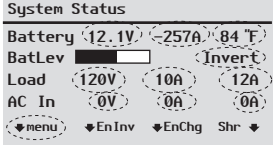

Figure 17 Bulk System Screen (Example)

You cannot select or change any of the information on the System Status screen. If you would like to view more detailed information, press the **Enter** button (indicated by the menu arrow) to go to the Select Device menu.

Viewing the Select Device Menu

The Select Device menu is where you can view a list of all the Xanbus-enabled devices in your power system.

At least two devices are sure to appear together with System Settings and Clock – the Freedom SW Inverter/Charger and the Xanbus SCP. Other devices such as the Xanbus AGS and the Freedom Sequence Intelligent Power Manager appear only when they are connected and installed.

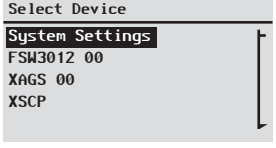

Figure 18 Select Device Screen

Selecting the Freedom SW from the Select Device Menu

To view the Freedom SW `Setup` menu screen:

◆ Follow the procedures on “To view the Freedom SW **`Setup`** menu screen:” on page 35.

You can view and change Freedom SW settings from the **`Setup`** menu screen. The **`Basic Settings`** and **`Advanced Settings`** bring up their menu screens for which other configurable settings can be found.

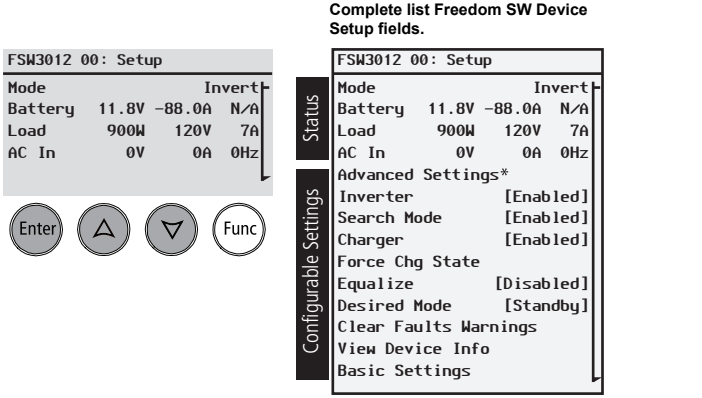

* appears only when **Enter**, Up, and Down arrow buttons are pressed together.

Figure 19 Device Setup Menu Screen

Changing Configurable Settings From The Device Setup Menu Screen

The Freedom SW can only be configured using the Xanbus SCP. Follow the procedure in "To view the Freedom SW **Setup** menu screen:" on page 35 to bring up the device setup screen for the Freedom SW inverter/charger.

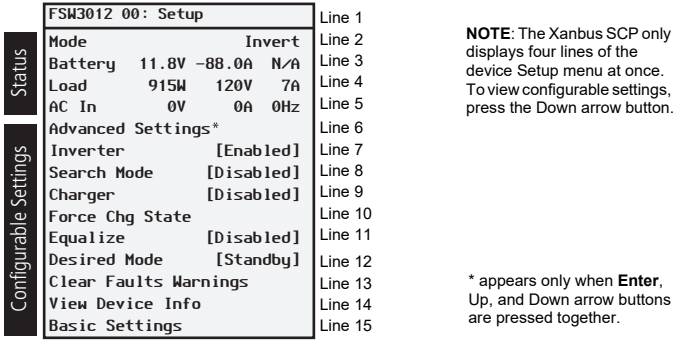

Figure 20 Freedom SW Device Setup Menu

As discussed in "Reading the Freedom SW Device Setup Screen" on page 35 the Freedom SW Device Setup menu screen has two segments. The first segment (lines 2 to 5) displays status information and appears first in the screen's initial four lines. The second segment (lines 6 to 15) contains selectable fields which are configurable settings.

These configurable settings are:

- Advanced settings
- Inverter
- Search mode
- Charger
- Force charge
- Equalize
- Desired mode
- Clear fault settings
- View device info
- Basic settings

Only nine of these settings are displayed at a time. The **Advanced Settings** (Line 6) is not initially listed and only lines 7 through 15 appear. When the Advanced Settings is listed, it will appear on top of the list for configurable settings and the setup screen will display lines 6 through 14.

See Table 5, "Configurable Settings" on page 44 for information on each setting.

To select and change a configurable setting:

1. On the setup menu, press the Down arrow (or Up arrow) button to highlight the setting you want to change.
2. Press **Enter** to highlight the current value of the setting.
3. Press the Up arrow or the Down arrow button to change the value. Hold down the button to scroll through a large range of values quickly.

   The previously set value (or default value) appears with an asterisk (*) beside it.
4. Press **Enter** to select and confirm the value.
5. If you have another setting to change, return to step 1.

   -Or-

   If you have no more settings to change, press **Func** until the Xanbus SCP displays the desired screen or menu.

IMPORTANT: If you have no more settings to change, it is recommended to leave the `Setup` menu in the basic settings format to help prevent unintentional configuration. If the `Setup` menu displays `Advanced Settings`, press **Enter** + Up arrow + Down arrow at the same time. The Setup menu should then display `Basic Settings` as the last item on the menu.

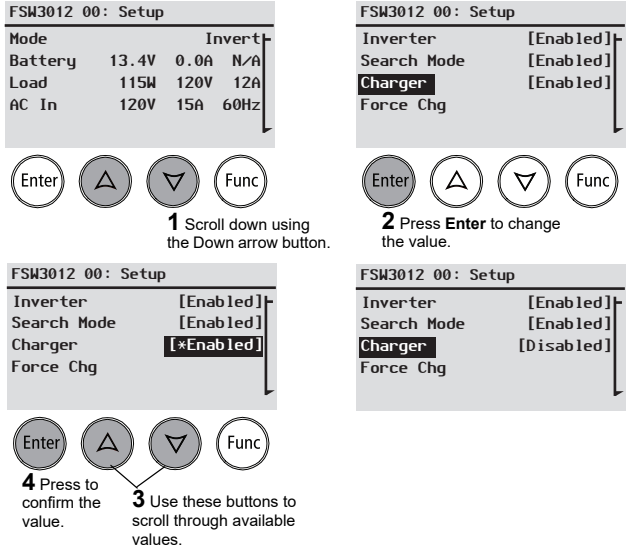

Figure 21 Selecting and Changing a Configurable Setting

Table 5 Configurable Settings

Item	Description
`Inverter`	Enables or disables the inverter function of the Freedom SW. When enabled, the unit will invert power from the batteries assuming there is enough charge in the batteries. Default value is Enabled.
`Search Mode`	Enables or disables the Search Mode function of the Freedom SW. See “Using Search Mode” on page 45 for more information. Default value is Disabled.
`Charger`	Enables or disables the charger function of the Freedom SW. When enabled, the unit will charge the batteries when AC is available. For more information on configuring the charger settings go to “Charger Settings Menu” on page 60. Default value is Enabled.
`Auto Chg Enable`	Forces the Freedom SW to charge the batteries when qualified input AC is detected even when the charger function is disabled.
`Equalize`	Initiates the battery equalization process. See “Equalization Procedure” on page 47 to enable the procedure. Default value is Disabled.
`Desired Mode`	Switches between Operating and Standby (Power Save) modes. Default value is Operating.
`Clear Faults Warning`	Clears any active faults and warnings.
`Basic Settings`	See “Changing Freedom SW Basic Settings” on page 48 for more information.
`Advanced Settings`	See “Changing Freedom SW Advanced Settings” on page 53 for more information.

Follow procedures on “To select and change a configurable setting:” on page 43 to change the settings.

Using Search Mode

Why use Search mode? Search mode allows the inverter to selectively power only items that draw more than a certain amount of power, which can result in power savings. The Freedom SW has a no-load power draw of about 28 watts. Enabling search mode reduces this power draw to less than 8 watts. Search mode operates differently in single-unit and multi-unit installations.

Single units When a single Freedom SW has search mode enabled, the inverter sends electrical search pulses through its AC output. These search pulses look for connected AC loads. The delay between search pulses is set using the `Search Delay` setting. After a load larger than the `Search Watts` setting is detected, the inverter starts producing AC output.

Double units When configured for 120/240-volt series stacking, each inverter/charger operates independently in search mode and attempts to detect loads connected to its terminals only.

To use search mode in parallel stacking, the Master unit must have `Search Mode` disabled. The Slave unit must have `Search Mode` enabled.

IMPORTANT: The Slave unit continuously monitors the output of the Master unit. If the Master unit has more than 60% of the rated load (for example, 1800 watts on Freedom SW 3012), the Slave unit will assist the Master and the two will share the load equally. Should the load on the Master drop below 20% of rated load (600 watts for Freedom SW 3012), the Slave unit disengages and returns to a waiting state.

When to set up Search mode The search mode feature is only valuable if the inverter can spend a fair amount of time “sleeping” each day. Therefore, if search mode is to be used it must be adjusted properly. The initial adjustment should be made so that the inverter comes on only when needed.

Certain types of loads can cause search mode to work unexpectedly. These types of loads are described in “Inverter Applications” on page 88. If these kinds of loads are in the system, follow the suggestions given to eliminate the problem.

If the problem loads cannot be eliminated, there are two work-around solutions:

1. Disable search mode from the main Freedom SW Setup menu, causing the inverter to always remain at full output voltage.
2. Use a search-friendly companion load whose only purpose is to be switched on to wake up the inverter to power the load that is unable to bring the inverter out of search mode.

NOTES:

- Search mode, by function, cannot work with clocks and timers or devices that need power 24 hours a day. Examples of devices with timers include video recorders, coffee makers with brew timers, refrigerators, and freezers with defrost timers. Examples of devices that need power 24 hours a day include telephone answering machines, alarm systems, motion detection lights, and some thermostats.
- When the inverter is searching the output for loads, lights that have a wattage lower than this setting may flash momentarily.

Equalization Procedure

To start equalizing the batteries, do one of the following:

- Apply AC voltage and ensure that the inverter/charger transfers AC and starts charging.
- On the Xanbus Setup menu, highlight **Equalize** and select **Enable**.
  The unit will proceed and execute a complete bulk and absorption charge before transitioning to equalize.
  IMPORTANT: The inverter/charger will not perform equalization if AC is not present, the charger is disabled, or the selected battery type does not support equalization. If any of these cases happen, a warning is issued

If the Freedom SW will not perform the equalization, see“Detected Warning Types and Behavior” on page 92.

⚠ WARNING

EXPLOSION HAZARD
Equalize charge flooded or vented batteries only. Hydrogen and oxygen gases are produced when batteries are equalize charged. Provide adequate ventilation and remove all sources of ignition to prevent explosion.
Failure to follow these instructions can result in death or serious injury.

IMPORTANT: In a system where more than one device is capable of equalizing batteries (such as stacked Freedom SWs), there is no system-wide equalization command for all devices. To equalize with two devices, each would have to be enabled individually. Alternatively, equalization can be performed using only one device. During the equalization process, one device applies the equalization charge while the other devices continue to operate in synchronized charge mode, typically in float (three-stage charging) or no-float (two-stage charging).

Changing Freedom SW Basic Settings

Basic Settings menu The Freedom SW configuration settings can be viewed in basic format (see “Selecting Basic Settings From the Device Setup Screen” on page 49). The basic settings include configuration items you may have to adjust routinely, or as part of initial setup. It provides access to basic control of the inverter/charger.

Temporary versus permanent The Freedom SW unit stores its configuration in its onboard memory which holds configuration values even during power cycling or restart events. The Freedom SW allows the user to make changes to the configuration settings at any time the unit is powered and communicates with the SCP or a Xanbus configuration tool. This is true for Basic Settings as well as Advanced Settings (page 53).

Any configuration setting changes will be temporary, that is, they will be lost after a power cycle or restart. In order to make the setting permanent, they must be saved in the onboard memory by placing the unit in Standby (Power Save) mode. For instructions on how to put the unit in Standby (Power Save) mode, see “Using the STBY/ON Fault Clear Button” on page 32. While the unit is in the Standby (Power Save) mode the configuration changes will be immediately saved in the onboard memory. For more information on operating states (modes), see page 37.

To select the Basic Settings menu screen:

1. On the **FSW3012 00:Setup** screen (Figure 22), press the Down arrow button until **Basic Settings** is highlighted.

Figure 22 Selecting Basic Settings From the Device Setup Screen

2. Then, press **Enter** to display the **FSW3012 00: Basic** screen which is the basic settings menu screen.
3. Press the Up and Down arrow buttons to move between selectable fields.

The Freedom SW basic settings include menus for configuring:

- Battery type
- Battery capacity
- Maximum charging rate
- Charging cycle
- Recharging volts
- AC In breaker rating
- Low battery cutout value

See Table 7, “Basic Settings” on page 51 for information on each setting.

An overview of the Freedom SW menu structure is shown below. The SCP displays the Freedom SW basic settings menu.

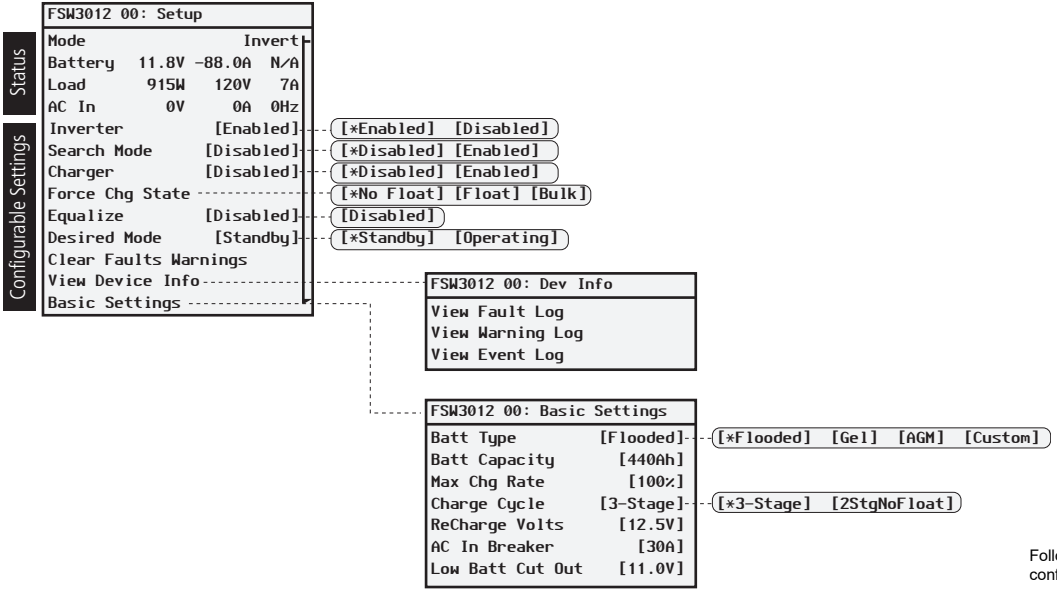

Follow procedures on “To select and change a configurable setting:” on page 43 to change the settings.

Figure 23 Menu Map of the Freedom SW Basic Settings

Table 6 Setting Defaults and Ranges

Model	Freedom SW 2012 / 3012			Freedom SW 2024 / 3024		
Item	**Default**	**Min**	**Max**	**Default**	**Min**	**Max**
Batt Type	Flooded	Flooded, Gel, AGM, Custom		Flooded	Flooded, Gel, AGM, Custom	
Batt Capacity 2000-watt models	250Ah	50Ah	2000Ah	250Ah	50Ah	1000Ah
Batt Capacity 3000-watt models	440Ah			440Ah		
Max Chg Rate	100%	10%	100%	100%	10%	100%
Charge Cycle	3Stage	3Stage, 2StgNoFloat		3Stage	3Stage, 2StgNoFloat	
ReCharge Volts	12.5V	11.0V	13.5V	25.0V	22.0V	27.0V
AC1 Breaker	30A	5A	30A	30A	5A	30A
Low Batt Cut Out	10.5V	10.0V	12.0V	21.0V	20.0V	24.0V

Table 7 Basic Settings

Item	Description
Batt Type	Sets the system battery chemistry and type: **Flooded**, **AGM**, **Gel**, and **Custom**. Selecting **Custom** displays the **Custom Settings** item, which allows you to adjust the settings for each charging stage.
Batt Capacity	Selects the system battery capacity in amp hours. Setting the battery capacity to 0 resets the charging current to its default values. Zero Ah battery capacity implies there is no absorption exit current criteria and absorption only exits when the absorption timer (default 3hrs, range 1min-8hr) expires.

Table 7 Basic Settings

Max Chg Rate	Sets the percentage of the maximum DC output current that is available to the charger. The maximum DC output current for different models is: Freedom SW 2012 —100 ADC Freedom SW 3012 —150 ADC Freedom SW 2024 —50 ADC Freedom SW 3024 —75 ADC If two Freedom SWs are charging the same battery bank, set each inverter's **Max Chg Rate** to 1/n of the desired charge rate (where n is the number of inverter/chargers).
Charge Cycle	Sets the charging method: **3-Stage** (bulk, absorption, float) or **2StgNoFloat** (bulk, absorption, no float).
ReCharge Volts	Sets the recharging volts to tell the charger to initiate charging when the battery drains past the value setting.
AC In Breaker	Set the breaker limit of incoming AC.

Table 7 Basic Settings

Low Batt Cut Out	Low Battery Cut Out (LBCO) controls when the inverter stops producing AC output due to a low battery voltage condition. The inverter will stop producing AC output only after this level has been reached for the period of time set by the **LBCO Delay**. This setting is not temperature compensated.

Changing Freedom SW Advanced Settings

Advanced Settings menu The advanced settings option gives you access to the full range of Freedom SW settings, including everything displayed on the basic menu. As a safeguard against unintended advanced configuration, the Xanbus SCP displays the basic settings by default. To view the advanced settings, you must perform a special keypress (see "Selecting Advanced Settings From the Device Setup Screen" on page 54). See also "Temporary versus permanent" on page 48.

NOTE:
This keypress enables the advanced settings for every device in the system. After performing the keypress, `Advanced Settings` appears in the list and `Basic Settings` disappears.

⚠ CAUTION

FIRE AND ELECTRICAL SHOCK HAZARD
Familiarize yourself with advanced settings and the system-wide impact of changing those settings. The advanced settings are intended for qualified installation/service personnel only. Setting parameters incorrectly could damage connected equipment (such as batteries) or could severely affect the performance of your system. Incorrect charging configuration can lead to battery damage and risk of fire.

Failure to follow these instructions can result in minor or moderate injury.

The Freedom SW advanced settings include menus for configuring:

- Inverter settings (see page 57)
- Charger settings (see page 60)
- AC transfer limit settings (see page 65)
- Generator support settings (see page 67)
- Stacking operation, including customizing the default model name of the Freedom SW, and setting its network device number. Setting the device number is important when two Freedom SWs are on the Xanbus network and sharing connections such as AC loads, utility grid, and generator. The device number is also used when configuring paralleled Freedom SWs for Master-Slave operation (see page 69)
- Restoring default settings (see page 74) and other advanced features (see page 75)

Freedom SW advanced menu screen lists status information and settings which require that you understand and plan for the changes you make. You may not have to adjust these settings as part of regular operation.

The SCP shows the Freedom SW basic menu by default. To view the advanced settings menu, you have to activate it by following the procedure below.

To select the Advanced Settings menu screen:

1. On the `FSW3012 00:Setup` screen (Figure 24), press the **Enter**, Up arrow, Down arrow buttons simultaneously to make `Advanced Settings` appear in the list.
2. On the `FSW3012 00:Setup` screen, press the down arrow button until `Advanced Settings` is highlighted.

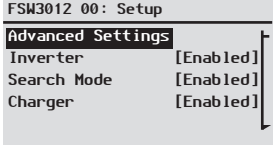

Figure 24 Selecting Advanced Settings From the Device Setup Screen

3. Then, press **Enter** to display the `FSW3012 00: Adv` screen which is the advanced settings menu screen.
4. Press the Up and Down arrow buttons to move between selectable fields.

IMPORTANT: The Basic Settings and Advanced Settings menu screens do not appear at the same time. You have to perform the preceding procedure to switch between having Basic Settings or Advanced Settings appear on the device setup screen.

An overview of the Freedom SW advanced settings menu structure is shown below and the next page.

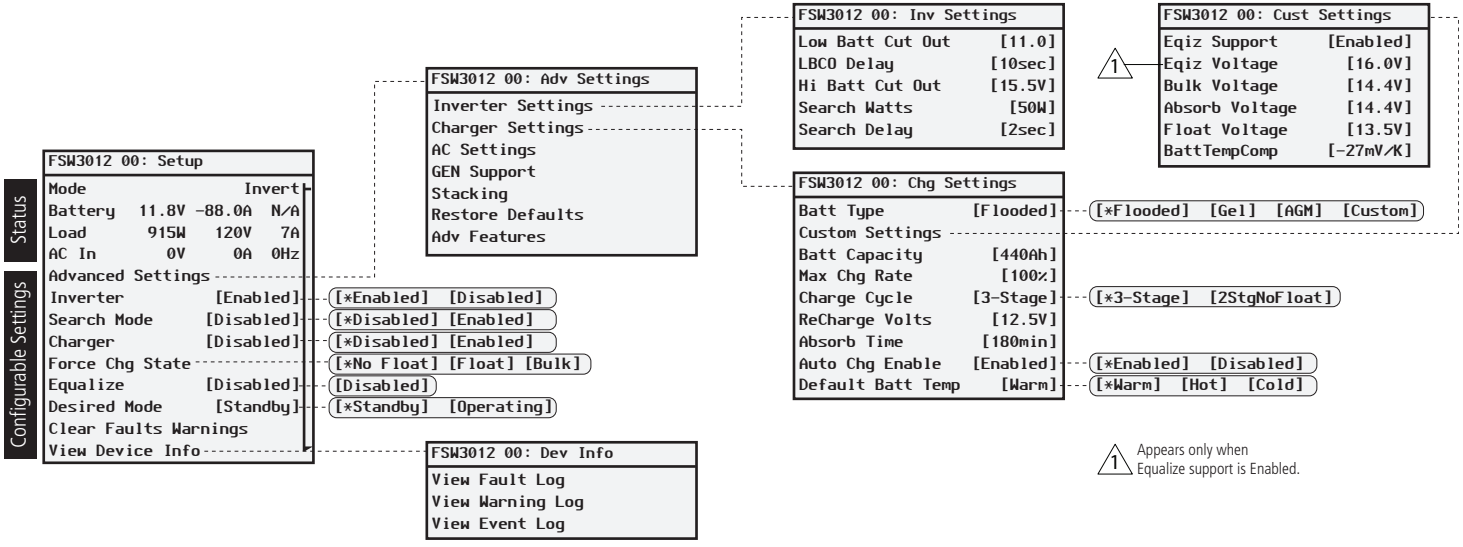

Figure 25 Menu Map of the Freedom SW Advanced Settings 1

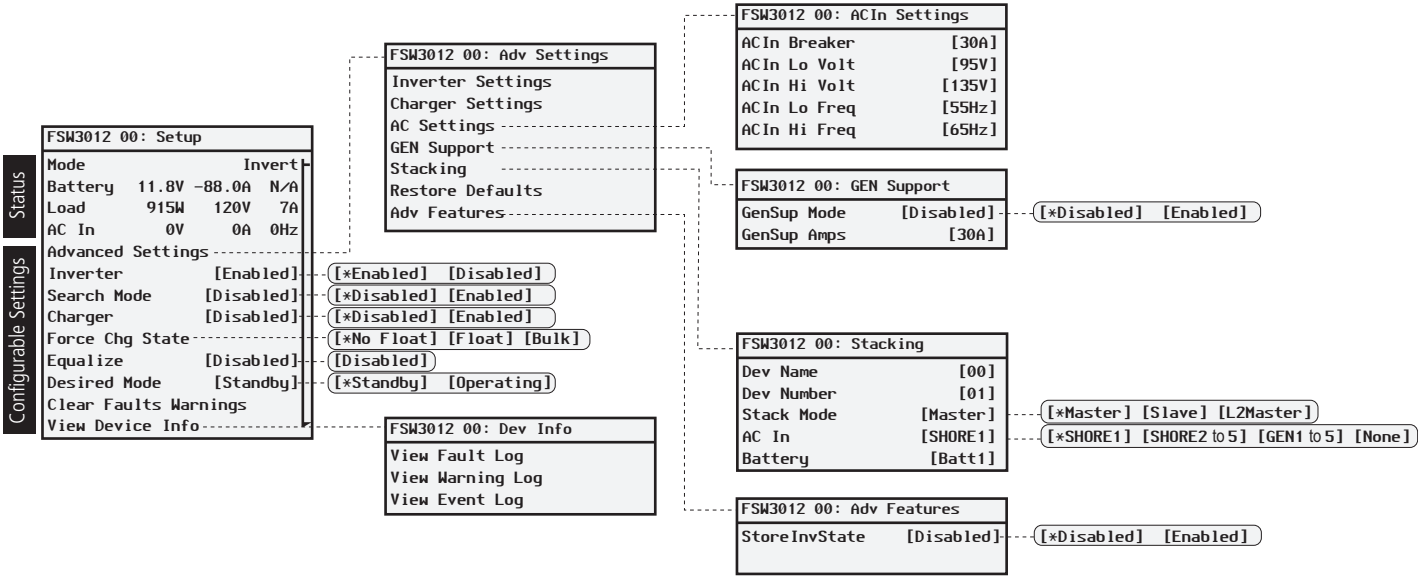

Figure 26 Menu Map of the Freedom SW Advanced Settings 2

Inverter Settings Menu

The **Inverter Settings** menu contains settings that control when the Freedom SW starts and stops producing AC output.

```
FSW3012 00: Inv Settings
Low Batt Cut Out      [11.0]
LBCO Delay           [10sec]
Hi Batt Cut Out      [15.5V]
Search Watts           [50W]
Search Delay          [2sec]
```

Follow procedures on “To select and change a configurable setting:” on page 43 to change the settings.

Figure 27 Inverter Settings Menu Screen

Table 8 Setting Defaults and Ranges

Model	Freedom SW 2012 / 3012			Freedom SW 2024 / 3024		
Item	**Default**	**Min**	**Max**	**Default**	**Min**	**Max**
Low Batt Cut Out	10.5V	10.0V	12.0V	21.0V	20.0V	24.0V
LBCO Delay	10sec	0sec	600sec	10sec	0sec	600sec
Hi Batt Cut Out	16.5V	14.5V	17.0V	33.0V	29.0V	15.5V
Search Watts	50W	25W	250W	50W	25W	250W
Search Delay	2sec	1sec	25sec	2sec	1sec	25sec

Table 9 Inverter Settings Description

Item	Description
Low Batt Cut Out	Low Battery Cut Out (LBCO) controls when the inverter stops producing AC output due to a low battery voltage condition. The inverter will stop producing AC output only after this level has been reached for the period of time set by the **LBCO Delay**. This setting is not temperature compensated.
LBCO Delay	LBCO Delay controls how long the inverter is allowed to operate at or below the **Low Batt Cut Out** level before turning off due to a low battery voltage condition. The inverter will stop producing AC output only after the **Low Batt Cut Out** level has been reached for this uninterrupted period of time. Once the inverter has shut off, the battery voltage must rise 2 volts above the **Low Batt Cut Out** setting (4 volts for 24-volt systems) for inverter operation to resume.

Table 9 Inverter Settings Description

Item	Description
`Hi Batt Cut Out`	Hi Batt Cut Out sets the maximum battery voltage at which the inverter will operate. If the battery voltage exceeds this limit for more than one minute, the Freedom SW displays a fault message and shuts down. The inverter will not support AC loads when in this condition. If a qualified AC source is present, the unit passes AC through to the loads. The inverter automatically restarts when the voltage drops to 1.5 volts (12 volt system) or 3 volts (24 volt system) below the `Hi Batt Cut Out` setting. If battery voltage continues to rise after shutdown, an external charger may still be charging the batteries. The Freedom SW cannot control how external chargers operate.
`Search Watts`	Search Watts sets the Freedom SW's search sensitivity when search mode is enabled. When a load larger than this setting is present, the inverter starts producing AC output. Enabling search mode from the `Setup` menu (see page 57) can minimize power draw from the battery during periods of low demand from loads. Also see "Using Search Mode" on page 45.

Table 9 Inverter Settings Description

Item	Description
`Search Delay`	Search Delay sets the time between search pulses. When searching for loads, the Freedom SW sends out search pulses to determine if a load is present. If the Freedom SW finds a load above the `Search Watts` setting, the inverter turns on. Freedom SW power draw while in search mode decreases when `Search Delay` is increased, but the Freedom SW's response time to active loads is slower.

Using the Low Battery Cut Out and LBCO Delay Settings

The `Low Batt Cut Out` setting is the lowest battery voltage level acceptable for use by the inverter. When the batteries discharge to the `Low Batt Cut Out` setting, and are held at or below this level for the `LBCO Delay` time, the inverter output shuts down and transfers any available AC source (generator or grid) to the charger to bring the battery level back above the `Low Batt Cut Out` setting. After shutdown, the inverter does not support any AC loads, and AC loads must be powered by either a generator or utility power.

- If using an automatic generator starting system, it is recommended to set the Xanbus AGS voltage trigger setting higher than the Freedom SW **`Low Batt Cut Out`** voltage.
- Although not recommended, if using an automatic generator starting system with the start trigger set to the same voltage as the LBCO voltage, do not set the **`LBCO Delay`** to less than the amount of time it takes the generator to start and connect.

Otherwise – in both of the scenarios above – inverter output turns off before the generator automatically starts, causing the battery voltage to recover slightly. This may then stop the Xanbus AGS from starting the generator or result in the Freedom SW cycling on and off multiple times before the generator automatically starts.

Charger Settings Menu

The **Charger Settings** menu provides options for configuring the Freedom SW to operate from your battery bank.

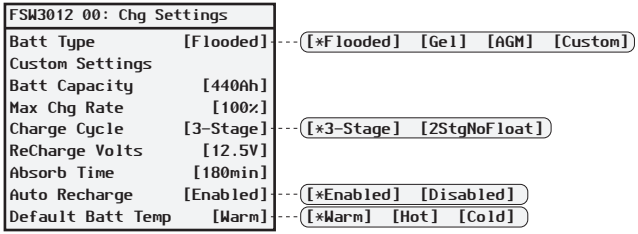

Follow procedures on “To select and change a configurable setting:” on page 43 to change the settings.

Figure 28 Charger Settings Menu Screen

Table 10 Setting Defaults and Ranges

Model	Freedom SW 2012 / 3012			Freedom SW 2024 / 3024		
Item	**Default**	**Min**	**Max**	**Default**	**Min**	**Max**
Batt Type	Flooded	Flooded, Gel, AGM, Custom		Flooded	Flooded, Gel, AGM, Custom	
Batt Capacity 2000-watt models	250Ah	50Ah	2000Ah	250Ah	50Ah	2000Ah
Batt Capacity 3000-watt models	440Ah			440Ah		
Max Chg Rate	100%	10%	100%	100%	10%	100%
Charge Cycle	3Stage	3Stage, 2StgNoFloat		3Stage	3Stage, 2StgNoFloat	
ReCharge Volts	12.5V	11.0V	13.5V	25.0V	22.0V	27.0V
Absorb Time	180min	1min	480min	180min	1min	480min
Auto ReCharge	Enabled	Enabled, Disabled		Enabled	Enabled, Disabled	
Default Batt Temp	Warm	Hot, Warm, Cold		Warm	Hot, Warm, Cold	

Table 11 Charger Settings Menu Description

Item	Description
`Batt Type`	Sets the system battery chemistry and type: `Flooded`, `AGM`, `Gel`, and `Custom`. Selecting `Custom` displays the `Custom Settings` item, which allows you to adjust the settings for each charging stage.
`Custom Settings`	Displays the `Custom Battery Settings` menu, where you can adjust settings specific to your battery type and installation. It is only displayed if `Custom` is selected as the `Batt Type`.
`Batt Capacity`	Selects the system battery capacity in amp hours. Setting the battery capacity to 0 resets the charging current to its default values. Zero Ah battery capacity implies there is no absorption exit current criteria and absorption only exits when the absorption timer (default 3hrs, range 1min-8hr) expires.

Table 11 Charger Settings Menu Description

Item	Description
`Max Chg Rate`	Sets the percentage of the maximum DC output current that is available to the charger. The maximum DC output current for different models is: Freedom SW 2012 —100 ADC Freedom SW 3012 —150 ADC Freedom SW 2024 —50 ADC Freedom SW 3024 —75 ADC If two Freedom SWs are charging the same battery bank, set each inverter's `Max Chg Rate` to 1/n of the desired charge rate (where n is the number of inverter/chargers).
`Charge Cycle`	Sets the charging method: `3Stage` (bulk, absorption, float) or `2StgNoFloat` (bulk, absorption, no float).
`ReCharge Volts`	Sets the recharging volts to tell the charger to initiate charging when the battery drains past the value setting.
`Auto ReCharge`	Enables or disables automatic charging. When there are two or more power sources for charging batteries, `Auto ReCharge` can be disabled to allow manual charging of batteries.

Table 11 Charger Settings Menu Description

Item	Description
`Absorb Time`	Sets the maximum time spent in the absorption stage, before transitioning to float or no float. **NOTE**: The Absorb Time setting resets to its default value of 180 minutes when the Battery Type is changed except when changing to Custom Settings. In Custom Settings, the Absorb Time setting will not reset to its default value.
`Default Batt Temp`	Selects the battery temperature charging compensation if a battery temperature sensor is not installed. In the absence of a battery temperature sensor, the charger uses one of three settings: `Cold` (5 °C/41 °F), `Warm` (25 °C/77 °F), or `Hot` (40 °C/104 °F).

Battery Charger Functions

When AC power is available, the Freedom SW can operate as a battery charger. Different battery types and chemistries require different charging voltage levels. Not charging batteries at the required levels can shorten battery life or damage the batteries. The Freedom SW is configured at the factory to work with the battery types recommended for inverter applications. If the default settings do not work for your specific installation, you can adjust the charge stage settings (as recommended by the battery manufacturer) on the `Custom` (Battery) `Settings` menu (see page 63).

NOTE: This information is provided for guidance only. Variations in battery chemistry and site-specific environmental considerations mean that you should consult your system designer or battery manufacturer for specific recommendations for appropriate battery voltage and current settings.

Custom Battery Settings Menu

NOTICE

EQUIPMENT DAMAGE

Consult your battery manufacturer and associated documentation before setting a custom battery type to avoid damaging your batteries during charging or equalization.

Failure to follow these instructions can damage the unit and/or damage other equipment.

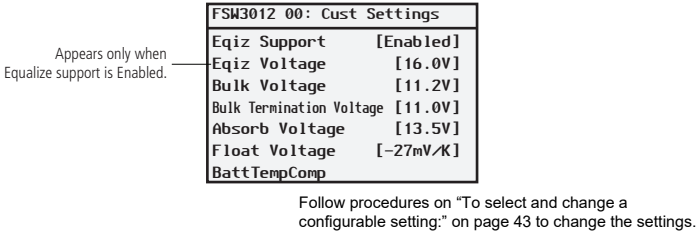

Figure 29 Custom Settings Menu Screen

Table 12 Setting Defaults and Ranges

Model	Freedom SW 2012 / 3012			Freedom SW 2024 / 3024		
Item	**Default**	**Min**	**Max**	**Default**	**Min**	**Max**
Eqlz Support	Enabled	Enabled, Disabled		Enabled	Enabled, Disabled	
Eqlz Voltage	15.5V	13.5V	16.0V	31.0V	27.0V	32.0V
Bulk Voltage	14.4V	11.2V	16.0V	28.8V	22.4V	32.0V
Bulk Termination Voltage	14.2V	11.0V	15.8V	28.4V	22.0V	31.6V
Absorb Voltage	14.4V	12.0V	16.0V	28.8V	24.0V	32.0V
Float Voltage	13.5V	11.0V	16.0V	27.0V	22.0V	32.0V
Batt Temp Comp	27-mV	0-mV	45-mV	54-mV	0-mV	90-mV

The **Custom Battery Settings** menu can be viewed if **Custom** is selected as the **Batt Type**. This menu allows you to adjust charging and equalization voltage for batteries with specifications that fall outside the default settings for the battery types the Freedom SW offers. You can also adjust the temperature compensation constant for the battery temperature sensor on this menu.

IMPORTANT: All settings for configuring a custom battery type are based on the default settings for a flooded battery type.

Table 13 describes the items on the **Custom Battery Settings** menu.

Table 13 Custom Battery Settings Menu Description

Item	Description
Eqlz Support	Enables or disables the ability to enter an equalization cycle. Refer to the battery manufacturer's specifications to determine whether equalization is recommended.
Eqlz Voltage[a]	Selects the equalization voltage. Consult your battery manufacturer for equalization voltage setting.
Bulk Voltage	Sets the bulk voltage for a custom battery type. This setting must be 0.4 V (or 0.2) or higher than Bulk Termination Voltage for the 24-volt model (or 12-volt model). See note below.
BulkTermination Voltage	Sets the bulk termination voltage for a custom battery type. This setting must be 0.4 V (or 0.2) or lesser than Bulk Voltage for the 24-volt model (or 12-volt model). See note below.
Absorb Voltage	Sets the absorption voltage for a custom battery type.

Table 13 Custom Battery Settings Menu Description

Item	Description
Float Voltage	Sets the float voltage for a custom battery type. See note below.
Batt Temp Comp	Battery temperature compensation for a custom battery type. This setting is the reference that the BTS uses to adjust the charging voltage when the temperature is above or below 25 °C (77 °F).

a. The **Eqlz Voltage** setting is displayed when **Eqlz Support** is set to **On**.

NOTE: If a warning is received indicating that a setting is not accepted by the SCP, gradually increase the value of the setting until the SCP accepts it. This type of warning means that an internal minimum threshold value is being crossed and therefore the setting cannot be saved.

ACIn Settings

The **ACIn Settings** menu configures the voltage and frequency limits for AC Input quantification range. These are the limits at which the Freedom SW considers input voltage qualified—that is, suitable for charging batteries or powering loads. If the input voltage is not qualified according to these settings, the Freedom SW transfers from using AC input to inverting.

```
FSW3012 00: ACIn Settings
ACIn Breaker          [30A]
ACIn Lo Volt          [95V]
ACIn Hi Volt         [135V]
ACIn Lo Freq         [55Hz]
ACIn Hi Freq         [65Hz]
```

Follow procedures on “To select and change a configurable setting:” on page 43 to change the settings.

Figure 30 ACIn Settings Menu Screen

Table 14 Setting Defaults and Ranges

Model	Freedom SW 2012 / 3012			Freedom SW 2024 / 3024		
Item	**Default**	**Min**	**Max**	**Default**	**Min**	**Max**
AC1 Breaker	30A	5A	30A	30A	5A	30A
AC1 Lo Volt	95V	78V	115V	95V	78V	115V
AC1 Hi Volt	135V	125V	140V	135V	125V	140V
AC1 Lo Freq	55Hz	44Hz	59Hz	55Hz	44Hz	59Hz
AC1 Hi Freq	65Hz	61Hz	70Hz	65Hz	61Hz	70Hz

Table 15 ACIn Settings Menu Description

Item	Description
`AC1 Breaker`	Sets the AC1 (Grid) breaker size, based on the size of the breaker installed on AC1. The installed breaker size must not exceed the capacity of the upstream distribution panel. The Freedom SW limits the maximum input current to this setting by derating its charging current to an equivalent of 80% of the AC breaker size. If the connected loads exceed the AC1 breaker setting, the AC breaker trips.
`AC1 Lo Volt`	Minimum acceptable input voltage level from the utility mains. **NOTE**: It is recommended to leave this setting to its default value and not to set it to the maximum allowed. Doing so might inadvertently derate charging power in jurisdictions where the nominal AC mains voltage or generator output is at 110 volts.
`AC1 Hi Volt`	Maximum acceptable input voltage level from the utility mains.
`AC1 Lo Freq`	Minimum acceptable utility mains input frequency.

Table 15 ACIn Settings Menu Description

Item	Description
`AC1 Hi Freq`	Maximum acceptable utility mains input frequency.

Gen Support

GEN Support is basically generator (and also shore power) support for the Freedom SW that allows power to be automatically drawn from the batteries to assist an AC generator or shore power to support heavy loads (for example, loads that exceed the available current from either a generator or shore power).

Generators and shore power have a limited output current and it is possible to reach this limit when operating heavy loads. When heavy current demand from the load is needed, additional power from the batteries can supply the needed energy.

In addition, the battery charger can reduce its charging current to the batteries so the combined charge AC current and total load current do not exceed the capacity of the generator (and shore power) or trip its output breakers or fuses.

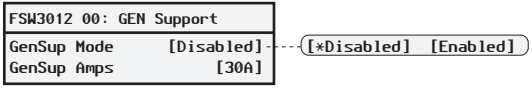

Follow procedures on “To select and change a configurable setting:” on page 43 to change the settings.

Figure 31 GEN Support Menu Screen

NOTE: Running and start-up (peak) currents are limited to the maximum current limits of the inverter.

Table 16 GEN Support Menu Description and Values[a]

Setting	Description	Default	Range
GenSup Mode	Turns the generator or shore power support feature on and off.	Disabled	Disabled, Enabled
GenSup Amps	Sets the generator or shore power load level at which the Freedom SW supplies power from the batteries to support the generator or shore power.	24A	4A to 24A

a. Applies to all Freedom SW models.

The Freedom SW supports the generator or shore power when the AC load current drawn from the generator or shore power exceeds the **GenSup Amps** setting for one to two seconds.

The system can enter this state if the battery voltage is above **Low Battery CutOut (LBCO)** plus 1 volt and **GEN Support** is enabled. **GEN Support** with a generator can only work when the Xanbus AGS is installed and detected in the system to control when to turn on the generator. **GEN Support** with shore power, however, does not need the Xanbus AGS.

Stacking Configuration Menu

The **Stacking** menu configures the Freedom SW to operate as a part of a multi-unit installation.

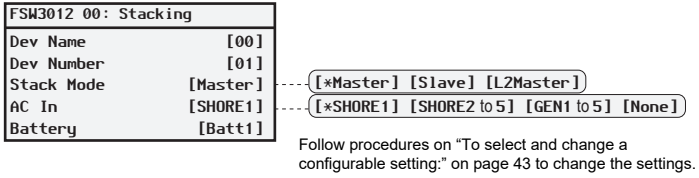

Figure 32 Stacking Menu Screen

IMPORTANT: Accessing this menu automatically places the Freedom SW in standby mode. When entering the **Stacking** menu, the unit identifies itself by flashing all front panel LEDs. After exiting the **Stacking** menu, the Freedom SW returns to operating mode and the front panel LEDs stop flashing.

NOTE: The same **Battery** number and **AC In** number must be used for all stacked Freedom SW units.

When installing a stacked system, every setting on the **Stacking** menu (except for **Dev Name**) must be configured for each Freedom SW in the system. The settings should be configured in the following order:

- Dev Number
- Stack Mode

Table 17 Stacking Menu Description and Values[a]

Item	Description	Default	Range
Dev Name	Allows the customizing of the default name for the inverter/charger. This setting is optional and does not affect operation. See "Setting the Device Name" on page 71.	**FSW3012** in the case of Freedom SW 3012.	Can be changed by the user.
Dev Number	Allows setting of a unique unit number in a two-unit system. See "Setting the Device Number" on page 72.	**00**	**00–31**

Table 17 Stacking Menu Description and Values[a]

Item	Description	Default	Range
Stack Mode	**Series Stacking**: For this to operate, one Freedom SW must be configured to Master and the other as L2Master, otherwise a system-wide fault is asserted.	Master	Master,Slave, L2Master
	Parallel Stacking: For this to operate, one Freedom SW must be configured to Master and the other as Slave, otherwise a system-wide fault is asserted.	Master	Master,Slave, L2Master
AC In	Identifies to the system the kind of AC input the inverters are accepting.	SHORE1	SHORE1–SHORE5 GEN1–GEN5 NONE
Battery	Points the system to which battery bank is used.	Batt1	Batt1–Batt5

a. Applies to all Freedom SW models.

Setting the Device Name

The **Dev Name** setting allows you to customize the name of the Freedom SW as it is displayed on other screens and menus.

Changing the device name is not mandatory for stacking to be successful. It simply allows a user to distinguish between two inverter/chargers that are installed in the same system.

The available characters are:

- A to Z
- a to z
- 0 to 9
- space

NOTE: Increasing the number of characters in a device name may cause other text on the same line to run off the edge of the screen. Device names should be limited to 10 characters or less.

Some examples of names are: “Master”, “Slave”, “Main”, and “Secondary”.

To customize the Freedom SW name:

1. On the device setup menu, select **Advanced Settings**.

   If **Basic Settings** appears instead of **Advanced Settings** on the device setup menu, display **Advanced Settings** by pressing **Enter** + Up arrow + Down arrow at the same time.
2. Select the **Stacking** menu.
3. Select **Dev Name**.
4. Press **Enter**.

   The last letter of the Freedom SW name is highlighted.
5. Begin customizing the device name.
   - To change the character, press the up or down arrow button. Holding down the button causes the characters to scroll more quickly.
   - To delete the character, press **Func**.
   - To add characters, press **Enter**.
6. When the correct character is shown, press **Enter** to select it.
7. After pressing **Enter** to select the last character of your customized device name, press **Enter** again to return to the menu.

Setting the Device Number

Setting the device number gives a Xanbus-enabled device a unique identity when several devices of the same type are installed in the power system network. When each identical device has a unique number, the Xanbus SCP can correctly identify and display status information for each device.
A device number consists of two digits ranging from 00 (default) to 31.

If only one of each type of device is installed in the network, you do not need to set the device number. However, setting the device number to a value other than 00 is recommended in case you need to use the **Restore Defaults** command (which resets the device number to 00). After performing the command, checking that the device number has returned to 00 indicates that the command was successfully completed.

To set the Freedom SW device number:

1. On the Freedom SW Setup menu, select **Advanced Settings**.

   If **Basic Settings** appears instead of **Advanced Settings** on the **Setup** menu, display **Advanced Settings** by pressing **Enter** + Up arrow + Down arrow simultaneously.

   On the **Advanced Settings** menu, select **Stacking** and press **Enter**.
2. On the **Stacking** menu, select **Dev Number**.
3. Press **Enter** to highlight the instance number.
4. Use the Up and Down arrow buttons to adjust the two-digit identifier number.
5. Press **Enter**.

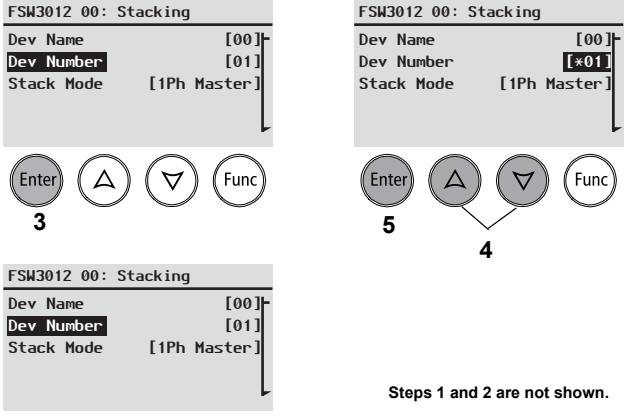

Figure 33 Setting a Device Number

Cascading

The **Cascading** feature is found in the **System Settings** menu only when two inverters are configured as a stacked pair (see “Stacking Configuration Menu” on page 69). A stacked pair has one Master unit and one Slave unit. The cascading feature allows manually entered inverter/charger settings on the Master unit to be automatically cascaded (or copied) to the Slave unit when the two units are meant to have the same settings. Cascading helps simplify the duplication of settings of one inverter into another. The feature is **Enabled** by default but may be **Disabled** to accommodate different settings for the Master and Slave units. Review with a qualified system designer before adopting different settings for the Master and Slave units.

To change Cascading settings:

1. From the **System Status** screen, press the **Enter** button.
   The **Select Device** menu screen appears.
2. From the **Select Device** screen, press the **Enter** button.
   The **System Settings** menu screen appears.
3. From the **System Settings** screen, press the Down arrow button to highlight **Cascading**.
4. Press **Enter** and use the Up and Down arrow buttons to change selections.
5. Press **Enter** again to choose a selection.
6. Press **Func** (3x) to return to the **System Settings** menu.

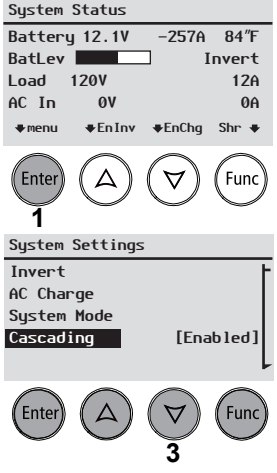

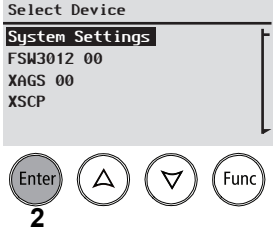

Steps 4 to 6 are not shown.

Resetting the Freedom SW to Default Settings

The **Restore Defaults** command returns the Freedom SW to factory default settings. After using the **Restore Defaults** command, the Freedom SW is no longer configured for the power system.

To restore Freedom SW default settings:

1. On the **Adv Settings** menu, select **Restore Defaults**.

   Warning **W252** appears, asking to confirm the command.

2. To cancel the command, press **Func**. To continue with the **Restore Defaults** command, press **Enter**.

IMPORTANT: If a warning is already active in the system, selecting **Restore Defaults** brings up the **Warnings** list, with warning W252 at the top. Press **Enter** to view **W252** and continue with the restore defaults process.

NOTICE

EQUIPMENT DAMAGE

Do not restore defaults while the Freedom SW is operating. De-energize the power system and disconnect the Freedom SW AC input before restoring defaults. Reconfigure the Freedom SW before reconnecting the AC input and re-energizing the power system.

Failure to follow these instructions can damage the unit and/or damage other equipment.

Using the Advanced Features

```
FSW3012 00: Adv Features
StoreInvState     [Disabled]
```

[*Disabled] [Enabled]

Follow procedures on “To select and change a configurable setting:” on page 43 to change the settings.

Figure 34 Adv Features Menu Screen

Table 18 Adv Features Description and Values[a]

Item	Description	Default	Range
`StoreInvState` This feature is available only to Freedom SW 2024 (PN: 815-2024)	When enabled remembers the state of the inverter function prior to a power down (that is, when AC and DC power sources are disconnected) or prior to a Standby (Power Save) mode. When the Freedom SW is powered up again or put back on Operating mode, the inverter function reverts back to its prior state.	`Disabled`	`Disabled`, `Enabled`

a. Applies to all Freedom SW models.

To store the state of the inverter to memory:

1. Press and hold the **STBY/ON Fault Clear** button on the SCP for more than five seconds to switch to Standby (Power Save) mode.
2. Select `Advanced Settings` on the SCP. See “To select the Advanced Settings menu screen:” on page 54.
3. On the `Advanced Settings` menu, select `Adv Features`.
4. On the `Advanced Features` menu, select `StoreInvState`.
5. Press **Enter** and use the Up and Down arrow buttons to change the setting to `Enabled`.
6. Press **Enter** again to choose the selection.
7. Press **Func** until you return to the `System Status` screen.
8. Press and hold the **STBY/ON Fault Clear** button on the SCP for more than five seconds to switch back to Operating mode.

Battery Charging Reference

This section describes the multistage charging algorithm (formula) of the Freedom SW.

Battery Types

Freedom SW charges flooded (or wet) lead-acid, Gel, AGM (absorbed glass mat), and custom batteries.

- **Flooded (or wet)** batteries have removable battery caps for refilling with distilled water and testing the electrolyte.
- **Gel** batteries have the electrolyte in the form of a gel rather than a liquid and do not require topping up. Gel batteries are sealed and the battery caps are not removable.
- **AGM (Absorbed Glass Mat)** batteries are similar to gel batteries except that the electrolyte is absorbed into a fiberglass matting.
- **Custom** battery is configured by the dealer, factory, or service center for battery types other than those listed above.

NOTICE

RISK OF BATTERY DAMAGE

Do not mix battery types. The Freedom SW can only select one battery type setting for all batteries connected to its bank. All connected batteries should either be: Flooded (or wet) *or* Gel *or* AGM *or* Custom.

Failure to follow these instructions can damage the unit and/or damage other equipment.

Charge Algorithm Stages

Three-Stage charging

If three-stage charging is enabled, the Freedom SW will charge batteries in a sequence known as three-stage charging. Whenever qualified AC power is present at the inverter's input, it passes power through to the connected load and begins charging the batteries. The charging voltage delivered to the battery depends on the battery's:

- Type setting
- Temperature (by switch setting or battery temperature sensor)
- State of charge

The three automatic stages are:

- Bulk
- Absorption
- Float

See Figure 35 for a graph of the three-stage charging profile.

There is a fourth stage, equalization, which is initialized manually as it is only performed occasionally and only on flooded (or wet) batteries.

The charging cycle is a multistage (three-stage) process. Whenever qualified AC power is present at the inverter's input, it passes power through to the connected load and begins charging the batteries.

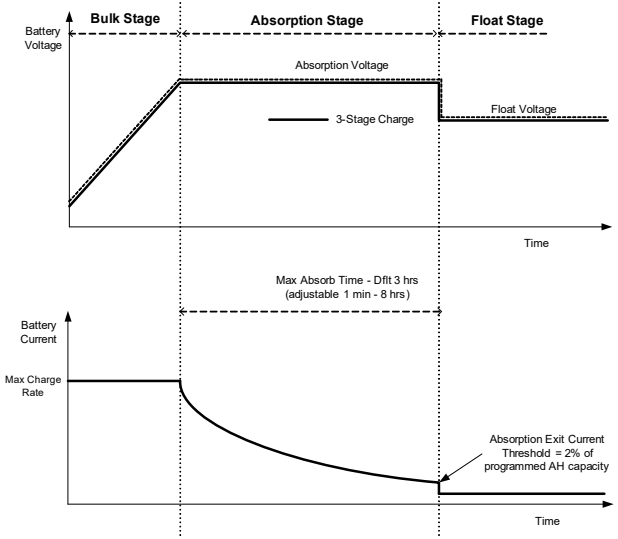

Figure 35 Three-Stage Battery Charging Cycle

NOTE:
When the charge cycle is interrupted, the charger will restart charging at the beginning of the multistage algorithm.
Exit Current Threshold can be effectively disabled by programming the amp-hour capacity to the minimum. In this case, absorption will only exit once the Max Absorption timer expires.
Charge current during equalize state (optional state not shown here) is normally limited to 10% of the programmed amp-hour capacity setting. If this setting is programmed to the maximum, the charge current during equalize is instead limited to whatever is programmed for the maximum current limit of the unit.
Synchronized charge states are active when more than one charging device is connected in the system via the Xanbus network.

- The first unit (Freedom SW) to enter bulk, causes all other chargers to enter bulk.
- The first Freedom SW to enter absorption causes all other Freedom SWs to enter absorption.
- The last Freedom SW ready to exit absorption triggers all Freedom SWs to exit absorption and exit charge.

Bulk Stage

Bulk charge is the first stage in the charging process and provides the batteries with a controlled, constant current. Once the battery voltage rises to the absorption voltage threshold, the charger switches to the absorption stage.

Table 19 Preset Bulk Voltage Settings

	Termination Voltage		Preset Bulk Voltage	
Battery Type	**12V models**	**24V models**	**12V models**	**24V models**
Flooded	14.2	28.4	14.4	28.8
Gel	14.0	28.0	14.2	28.4
AGM	14.1	28.2	14.3	28.6
Custom	14.4 (changeable)	28.8 (changeable)	14.4 (changeable)	28.8 (changeable)

Absorption Stage

Absorption charge is the second stage of battery charging and provides the batteries with a controlled, constant voltage. During this stage, the current drawn by the batteries slowly decreases. When this current falls below 2% of the battery capacity, or when the configurable **Absorb Time** expires, the charger switches to the Float or NoFloat stage, depending on the selected charge cycle. The timer begins when the battery voltage is above the bulk termination voltage for three minutes.

Table 20 Preset Absorption Voltage Settings

	Preset Absorption Voltage	
Battery Type	**12V models**	**24V models**
Flooded	14.4	28.8
Gel	14.2	28.4
AGM	14.3	28.6
Custom	14.4 (changeable)	28.8 (changeable)

The Freedom SW transitions to the float stage if either one of the following two conditions are met:

1. The charge current allowed by the batteries falls below the exit current threshold, which is equal to 2% of the programmed battery capacity (for a 500 amp-hour battery bank, this would be 10 amps), for three minutes.
2. The Freedom SW has been in absorption for the programmed maximum absorption time limit. The default is 3 hours, but the time limit is programmable from 1 minute to 8 hours.

NOTE: If there are DC loads on the batteries, the charger's current may never decrease to a level to initiate the next stage of charging. In this case, the charger would stay in absorption until the **Absorb Time** setting is reached.

NOTE: To make sure the charger does not remain in absorption for too long, adjust **Absorb Time** on the **Charger Settings** menu. The timer begins at the start of the absorption stage and terminates absorption charging if the charge current does not decrease to below 2 per cent of the battery capacity before the **Absorb Time** setting expires. The **Absorb Time** setting may be increased if the charge cycle continually runs the full **Absorb Time** in the absence of DC loads. This is an indication of too large a battery bank for the selected **Absorb Time** setting.

Float Stage

Float charge maintains the batteries slightly above the self discharge voltage of the batteries. The charge current in float is the current necessary to maintain the batteries at the **`Float Voltage`** setting, limited only by the inverter's capability or other settings that limit the inverter's maximum charge rate. Float charging reduces battery gassing, minimizes watering requirements (for flooded batteries), and makes sure the batteries are in a constant state of readiness. When three-stage charging is selected, the charger automatically switches to the float stage after the batteries have received a bulk and absorption charge (see Figure 35). The batteries are maintained at the default float voltage level for the selected battery type or the voltage selected under **`Float Voltage`** on the **`Custom Battery Settings`** menu.

Table 21 Preset Float Voltage Settings

	Preset Float Voltage	
Battery Type	**12V models**	**24V models**
Flooded	13.5	27.0
Gel	13.8	27.6
AGM	13.4	26.8

Table 21 Preset Float Voltage Settings

	Preset Float Voltage	
Battery Type	**12V models**	**24V models**
Custom	13.5 (changeable)	27.0 (changeable)

NOTE: The battery voltage can increase above the float voltage when using an external charging device such as PV arrays, wind turbines, and micro-hydro generators. Be sure to include appropriate charge management equipment with all external DC sources.

Two-Stage Charging Process

Two-stage (or no float) mode differs from an ordinary three-stage charge mode in that it does not continuously maintain the battery at float voltage. Instead, the Freedom SW begins charging the battery in bulk mode whenever the battery voltage drops below the recharge level. While the battery voltage is above the recharge level the inverter's AC transfer switch continues to pass power through from the utility grid to the loads, but does not actively charge the batteries.

Two-stage mode increases efficiency of utility connected systems by reducing the amount of power consumed by the inverter and batteries compared to when the battery is continuously maintained at **`Float Voltage`**. This feature can extend the life of most batteries.

NOTE: If the AC input fails or drops below the lower VAC limit (as set in `AC Settings`), the complete multistage charge cycle (bulk, absorption, float/no float) restarts once the source AC recovers to within the acceptable range. If the batteries are already nearly full, the charge cycle will take little time to complete.

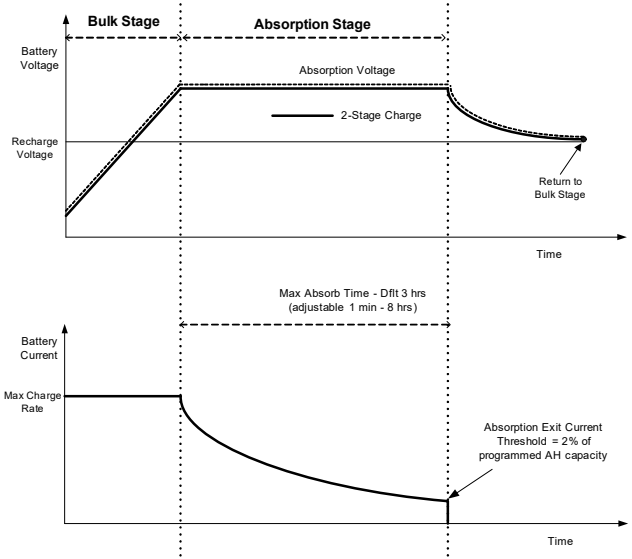

Figure 36 Two-Stage Charging Cycle

NOTE:
When the charge cycle is interrupted, the charger will restart charging at the beginning of the multistage algorithm.
Exit Current Threshold can be effectively disabled by programming the amp-hour capacity to the minimum. In this case, absorption will only exit once the `Max Absorption` timer expires.
Charge current during equalize state (optional state not shown here) is normally limited to 10% of the programmed amp-hour capacity setting. If this setting is programmed to the maximum, the charge current during equalize is instead limited to whatever is programmed for the max current limit of the unit.
Synchronized charge states are active when more than one charging device is connected in the system via the Xanbus network.

- The first unit to enter bulk, causes all other chargers to enter bulk.
- The first Freedom SW to enter absorption causes all other Freedom SWs to enter absorption.
- The last Freedom SW ready to exit absorption triggers all Freedom SWs to exit absorption and exit charge.

Equalize Charging

Many battery manufacturers recommend periodic equalize charging to counter cell charge imbalance and capacity-robbing electrolyte stratification. Equalizing helps to improve battery performance and lifespan by encouraging more of the battery material to become active.

Battery equalization is a controlled overcharging method that mixes up stratified electrolyte and reactivates unused areas of the plate material. Periodic equalizing can help to regularly restore batteries to a full and healthy state of charge.

Consult the battery manufacturer's recommendation for equalize charging settings. Sealed batteries should **never** be equalized. Consult the battery manufacturer for optimal charging procedures when using sealed batteries.

When `Equalize` mode is enabled, the battery is charged from bulk to absorption, and then to the equalize phase. The Freedom SW will transition from the absorption phase to equalize if:

- the DC charge current is below 2% of the configured battery capacity (for example, 8.8A for 440Ah)
- the absorption time is exceeded (for example, 180 min)

After absorption, the maximum charge DC current is set to 10% of battery capacity (for example, 44A for 440Ah). See Figure 37. This constant current charge will continue until the voltage has increased to the equalize voltage at which point the battery will be regulated at the temperature-compensated equalize voltage.

If the battery capacity is set to zero (Ah=0 effectively disables the exit current criteria for the absorption charge stage making the absorption stage defined by time only), the equalize charge current is fixed at maximum 100% of the charge rate.

Equalization duration is fixed at one hour.

Table 22 Preset Equalization Voltage Settings

	Preset Equalization Voltage	
Battery Type	**12V models**	**24V models**
Flooded	16.0	32.0
Gel	n/a	n/a
AGM	n/a	n/a
Custom	16.0 (changeable)	32.0 (changeable)

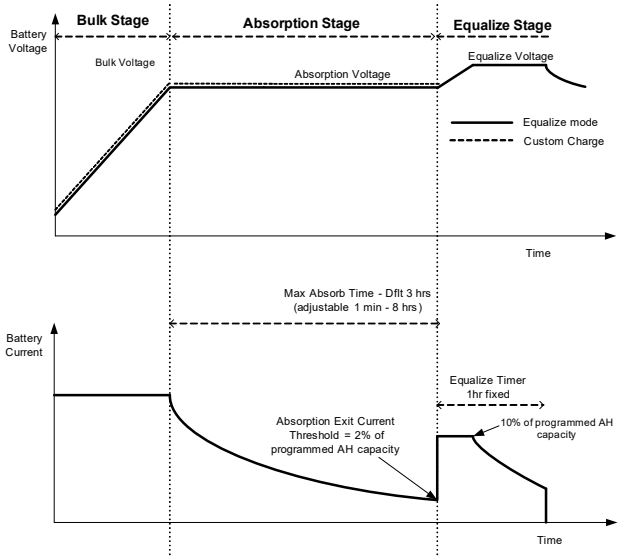

Figure 37 Equalize Charging

General Troubleshooting Guidelines

This section will help you narrow down the source of any problem you may encounter. Please read the following troubleshooting steps:

1. Check for a warning or fault message on the Xanbus SCP or a fault code on the inverter information panel. If a message is displayed, record it immediately.
2. As soon as possible, record the conditions at the time the problem occurred. These details should include the following information:
   - Loads the Freedom SW was running or attempting to run
   - Battery condition at the time of failure (battery voltage or temperature, for example), if known
   - Recent sequence of events (for example, charging had just finished, utility grid had failed but the inverter did not come on)
   - Any known unusual AC input factors such as low voltage or unstable generator output
   - Extreme conditions which may have existed at the time (temperature or moisture, for example).
3. Attempt the solution indicated in these guidelines.
4. If your inverter information panel or Xanbus SCP is not displaying a Fault LED, check the following list to make sure that the present state of the installation allows proper operation of the unit. Read these guidelines carefully.

❒ Is the Freedom SW located in a clean, dry, adequately ventilated area?
❒ Have the AC input breakers opened? If so, your pass-through load may have exceeded the rating of one or more of the input breakers.
❒ Are the battery cables adequately sized and short enough? See the Installation Guide for more information.
❒ Is the battery in good condition and are all DC connections tight?
❒ Are the AC input and output connections and wiring in good condition?
❒ Are the configuration settings correct for your particular installation?
❒ Are the display panel and the communications cable properly connected and undamaged?
❒ Is the battery temperature sensor and its cable properly connected and undamaged?

5. Contact Customer Service for further assistance. Please be prepared to describe details of your system installation and provide the model and serial number of the unit. See the front and/or back of the manual for contact information.

Inverter Applications

The Freedom SW performs differently depending on the AC loads connected to it. If you are having problems with any of your loads, read this section.

Resistive Loads

Resistive loads are the easiest and most efficient to drive. Voltage and current are in phase, which means they are in step with one another. Resistive loads generate heat in order to accomplish their tasks. Toasters, coffee pots, and incandescent lights are typical resistive loads. It is usually impractical to run larger resistive loads—such as electric stoves and water heaters—from an inverter due to their high current requirements. Even though the inverter may be able to accommodate the load, the size of battery bank will limit inverter run time.

Motor Loads

Induction motors (AC motors without brushes) require up to six times their running current on startup. The most demanding are those that start under load (for example, compressors and pumps). Of the capacitor start motors (typical in drill presses and band saws, for example), the largest you can expect to run is one horsepower. Universal motors are generally easier to start. Check that the Locked Rotor Amps (LRA) rating of the motor load does not exceed the maximum surge current rating of the inverter. Since motor characteristics vary, only testing will determine whether a specific load can be started and how long it can be run.

If a motor fails to start within a few seconds or loses power after running for a time, it should be turned off. When the inverter attempts to start a load that is greater than it can handle, the inverter may shut down from an AC overload fault.

Problem Loads

Very Small Loads If the power consumed by a device is less than the threshold of the search mode circuitry, and search mode is enabled, the inverter will not run. Most likely the solution will be to disable **Search** mode or lower the sense threshold.

Fluorescent Lights and Power Supplies Some devices cannot be detected when scanned by search mode circuitry. Small fluorescent lights are the most common example. Some computers and sophisticated electronics have power supplies that do not present a load until line voltage is available. When this occurs, each unit waits for the other to begin. To drive these loads, either a small companion load like a light bulb rated for more than the `Search Watts` setting must be used to bring the inverter out of search mode, or the inverter may be programmed to remain on by disabling `Search` mode. (See "Using Search Mode" on page 45.)

Clocks You may notice that your clocks are not accurate. Some of the clocks on your appliances may reset when the Freedom SW is in search mode.

Searching When the inverter is in search mode, it may fail to start some loads even though the rated wattage on the load is more than the `Search Watts` setting. Disable `Search` or apply an additional load (companion load) to make the inverter exit search mode.

Troubleshooting the Freedom SW via the SCP

The Freedom SW is designed with a number of protection features to provide efficient operation. If, however, you have any problems operating your inverter/charger read this troubleshooting chapter.

If you cannot resolve the problem, record the information about your system. This information will help your dealer or customer service to assist you better when you contact them.

⚠ DANGER

ELECTRICAL SHOCK HAZARD

Do not disassemble the inverter/charger. The Freedom SW contains no user-serviceable parts.

Failure to follow these instructions will result in death or serious injury.

When a detected fault or warning message appears, you can acknowledge the message to clear the screen. To acknowledge a fault or warning message, press the **Enter** button on the SCP. This action does not clear the fault or warning condition, so you should consult “Detected Fault Messages” on page 93 and “Detected Warning Messages” on page 102 for suggested actions after you have acknowledged the message. Refer to the *Xanbus System Control Panel Owner’s Guide* for more information on detected faults and warnings.

Detected Fault Types

There are three types of detected fault messages: automatic faults, manual faults, and escalating automatic faults. Table 1 describes how they differ in their behavior and how you can respond to them when they appear on the SCP.

Table 1 Detected Fault Types and Behaviors

Fault type	Behavior
Automatic fault	Clears automatically if the detected condition that generated the message goes away. You can also acknowledge automatic faults without waiting for them to clear automatically.

Table 1 Detected Fault Types and Behaviors

Fault type	Behavior
Manual fault	Requires you to clear it by: • Selecting Clear Faults on the Freedom SW or on the device that generated the detected fault (if the condition still exists, the fault message reappears). • Correcting the condition that detected the fault.
Escalating automatic faults	Clears automatically if the detected fault condition goes away, just like an automatic fault. However, if an escalating automatic fault occurs several times within a defined time period, the escalating automatic fault becomes a manual fault, requiring user intervention. For example, if three detected faults occur in one minute, it will no longer clear itself but becomes a manual fault. Then, you must identify the problem, correct the condition that detected the fault, and clear the fault or reset the device.

To view a fault list:

1. On the Select Device menu, highlight System and press **Enter**.
2. On the System Settings menu, highlight View Fault List.
3. Press **Enter**.

Detected Warning Types

There are two types of detected warnings: automatic and manual. When the Freedom SW detects a warning condition, it displays a warning message on the SCP.

Table 2 describes how they differ in their behavior and in how you can respond to them when they appear on the SCP.

To view a warning list:

1. On the Select Device menu, highlight System and press **Enter**.
2. On the System Settings menu, highlight View Warning List.
3. Press **Enter**.

Table 2 Detected Warning Types and Behavior

Warning type	Behavior
Automatic warning	Clears automatically if the detected condition that generated the message goes away. You can also acknowledge automatic warnings without waiting for them to clear automatically.
Manual warning	Requires you to acknowledge it before you can proceed with configuring or operating the Freedom SW. Manual warnings are usually in the form of a Yes/No question that you may acknowledge by pressing the **Enter** button on the SCP for Yes and the **Func** button for No. Refer to the *Xanbus System Control Panel Owner's Guide* for more information.

Table 3 provides a detailed description of the detected fault messages and solutions. If you are unable to resolve the problem after referring to this table, contact your dealer or Customer Service.

Table 3 Detected Fault Messages

Fault Number	Message	Fault Type	Cause	Solution
F1	AC Output under voltage	Escalating Auto Fault. Must occur 3 times in 30 seconds before becoming a manual fault.	Inverter voltage is under 100 volts.	Remove excessive load.
F2	AC Output over voltage	Escalating Auto Fault. Must occur 3 times in 30 seconds before becoming a manual fault.	Inverter voltage is over 135 volts.	Check if there is an external power source that is running parallel to the inverter's output.
F17	Relays Welded	Manual	AC backfeed from welded relay.	Service required.
F18				

Table 3 Detected Fault Messages

Fault Number	Message	Fault Type	Cause	Solution
F44	Battery Over Temperature	Automatic	Battery temperature is over 140 °F (60 °C). Poor battery compartment ventilation.	Stop charging if necessary. Check cable connections. Check battery voltage/current and temperature. If battery is not accepting charge, it may need to be replaced. Check for excessive ambient temperature and adequate ventilation in the battery compartment.
		Automatic	BTS may be damaged.	If the unit displays a temperature of over 212 °F (100 °C), the BTS will need to be replaced.
F46	Controller Error	Manual	Unit's control board may be damaged.	Service is required.

Table 3 Detected Fault Messages

Fault Number	Message	Fault Type	Cause	Solution
F47	DC Under Voltage (Immediate)	Automatic	Immediate battery under voltage fault.	Check battery condition (short or open cells) and ensure correct voltage. Battery state charge or capacity is so low that the DC voltage collapses when inverter load is applied. Inverter load is so large that the DC voltage collapses when inverter load is applied.
F48	DC Under Voltage (Fault)	Automatic	Voltage at the DC input terminals is below the Low Battery Cut Out (LBCO) setting for 10 seconds.	Check for the correct battery voltage at the inverter's DC input terminals. Check for external DC loads on the batteries. Check condition of batteries and recharge if necessary. Reduce the Low Battery Cut Out (LBCO) setting. Battery bank capacity may be inadequate for the loads in the system.

Table 3 Detected Fault Messages

Fault Number	Message	Fault Type	Cause	Solution
F49	DC Over Voltage	Automatic	Voltage at the DC input terminals is above the High Battery Cut Out Setting	Clear the fault and attempt restart. Ensure battery voltage is 10–16 VDC at Freedom SW terminals. Check all other charging source outputs, battery cables.
F52-F56	EEPROM ERROR	Manual	A problem has been detected with the internal memory.	Clear the fault and check the latest configuration made or any recent configurations. If fault detection reoccurs or occurs frequently, service is required.

Table 3 Detected Fault Messages

Fault Number	Message	Fault Type	Cause	Solution
F57	FET1 Over Temperature	Automatic	Ambient temperature may be too high.	Ensure adequate ventilation around the Freedom SW. Allow inverter to cool down and try restarting.
			Operating too large of a load for too long while inverting.	Remove excessive inverter loads.
			Inverter cooling fan may have failed.	If the temperature is above 104 °F (40 °C), the fan should be on. Hold your hand or a piece of paper to the inverter vent to check if the fan is working. Both fans should be active at the same time.
			Inverter airflow intake may be blocked.	Increase the clearance around the inverter and/or unclog the airflow intake vents.
F58	FET2 Over Temperature	Automatic	Same as F57.	Same as F57.

Table 3 Detected Fault Messages

Fault Number	Message	Fault Type	Cause	Solution
F59	GOCFG process failed	Manual	The unit may be running outdated firmware.	Clear the fault and check if the latest firmware is installed. If not, download and install the latest firmware from the website.
F62	Invalid Interrupt	Manual	Unit's control board may be damaged.	Service is required.
F63	Power Board Temp unreadable	Automatic	Temperature sensor is damaged.	Service required.
F64	AC overload	Escalating Auto Fault. Must occur 3 times in 60 seconds before becoming a manual fault.	Persistent excessive inverter current above rated current.	Avoid loads with long surge current.
F67	Watchdog Error	Manual	Unit's control board may be damaged.	Service is required.
F68	Transformer Over Temperature	Automatic	Same as F57.	Same as F57.

Table 3 Detected Fault Messages

Fault Number	Message	Fault Type	Cause	Solution
F69	External Sync Failed	Automatic	When Series stacking— the Stacking cable is not installed.	Install the Stacking cable to connect the two inverter/chargers.
F70	Unique Dev# Needed	Automatic	When stacking (Series or Parallel)—if two units have the same Device Number.	Change the Device Number of one unit. See “Setting the Device Number” on page 72.
F71	Too Many Masters	Automatic	When stacking (Series or Parallel)—if two units are configured as Master units.	Change one unit to a Slave unit. See Stack Mode under “Stacking Configuration Menu” on page 69 in Table 17.
F73	Transformer Temp unreadable	Automatic	Temperature sensor is damaged.	Service required.

Table 3 Detected Fault Messages

Fault Number	Message	Fault Type	Cause	Solution
F74	Other Unit Invert Fault	Automatic	When stacking (Series or Parallel)—if one of the units encounters a fault that needs to be resolved.	Clear the primary fault on the unit that caused this fault.
F75	Master Inverter Lost	Automatic	When Parallel stacking—if the Slave unit cannot detect the Master unit in the Xanbus network.	Make sure that the two units are connected in the same Xanbus network. Check cable connections and ensure that the plugs are neatly inserted in the ports. Check if the Xanbus network is properly installed with network terminators.
F76	No Masters	Automatic	When stacking (Series or Parallel)—if all units are configured as Slave.	Assign the other unit as Master.
F77				
F79	Battery Sensor Short	Automatic	The BTS has been damaged.	Replace the BTS.

Table 3 Detected Fault Messages

Fault Number	Message	Fault Type	Cause	Solution
F85	PowerBoard Over Temperature	Automatic	Same as F57.	Same as F57.
F86	Dead Battery Detected	Automatic	When battery voltage is below the allowable charging voltage.	Recharge the battery with an external charging device. If the error persists, then the battery may be defective. Replace the battery.
F88	MPPT Ground Fault	Automatic	In a Xanbus network, an MPPT has detected a ground fault (MPPT generated code F56).	Check the MPPT and correct the ground fault.

Table 4 provides a detailed description of the detected warning messages and solutions. If you are unable to resolve the problem after referring to this table, contact your dealer or Customer Service.

Table 4 Detected Warning Messages

Fault Number	Message	Cause	Solution
W48	DC under voltage (Warning)	Voltage at the DC input terminals is below the Low Battery Cut Out (LBCO) setting.	Check for the correct battery voltage at the inverter's DC input terminals. Check for external DC loads on the batteries. Check condition of batteries and recharge if necessary. Reduce the Low Battery Cut Out (LBCO) setting. Battery bank capacity may be inadequate for the loads in the system.
W72	AC Out Assoc Mismatched	In a stacking configuration—the AC In settings are not the same for both units.	Change the AC In setting of both units in the stacking configuration to be the same. See “Stacking Configuration Menu” on page 69.
W87	Inconsistent Frequencies	In a stacking configuration—the AC input low and high frequency settings are not the same for both units.	Change the AC input low and hi frequency settings of both units in the stacking configuration to be the same. See “ACIn Settings” on page 65.

Table 4 Detected Warning Messages

Fault Number	Message	Cause	Solution
W92	Input Connected to 3-Phase AC		

Specifications

NOTE: Specifications are subject to change without prior notice.

Physical Specifications	Freedom SW 2012	Freedom SW 2024	Freedom SW 3012	Freedom SW 3024
L × W × H	387×343×197 mm (15.25×13.5×7.75 in.)			
Net Weight	27.5 kg (60.5 lbs)		31.5 kg (69.4 lbs)	

Environmental Specifications	Freedom SW 2012	Freedom SW 2024	Freedom SW 3012	Freedom SW 3024
Nominal Ambient temperature	30 °C (86 °F)		40 °C (104 °F)	
Invert mode: • Operating range (full power) • Load @ maximum ambient	 –20 to 30 °C (–4 to 86 °F) 1700W @ 60 °C		 –20 to 40 °C (–4 to 104 °F) 2600W @ 60 °C	
Charge mode: • Operating range (full power) • Current @ maximum ambient	 –4 to 104 °F (–20 to 40 °C) 80 A @ 140 °F (60 °C)	 –4 to 104 °F (–20 to 40 °C) 40 A @ 140 °F (60 °C)	 –4 to 77 °F (–20 to 25 °C) 120 A @ 140 °F (60 °C)	 –4 to 104 °F (–20 to 40 °C) 60 A @ 140 °F (60 °C)
Storage temperature range	–40 to 185 °F (–40 to 85 °C)		–40 to 185 °F (–40 to 85 °C)	
Humidity: Operation/Storage	≤ 95% RH, non-condensing			
Altitude: • Operating • Non-operating	 4,572 m (15,000 feet) 15,240 m (50,000 feet)			
Mounting	deck mount, wall mount with fans and DC/AC sides facing sideward			

NOTE: All inverter specifications are at nominal conditions: 12 (or 24) volts DC inverting 120 volts AC, unless otherwise specified.

Inverter Specifications	Freedom SW 2012	Freedom SW 2024	Freedom SW 3012	Freedom SW 3024
Output wave form	pure sine wave (true sine wave)			
Output power (continuous)	2000 W (up to 30 °C)		3000 W (up to 40 °C)	
Output power (5 seconds)	4000 W		6000 W	
Output current	17 A		24 A	
Peak output current	55 A		80 A	
Output frequency	60 Hz ± 0.2 Hz		60 Hz ± 0.2 Hz	
Output voltage	120 VAC		120 VAC	
AC output connection/s	Single		Split phase in/dual out, Dual in/dual out	
Peak efficiency	90%	94%	90%	94%
No-load current draw (Inverter On)	<3 ADC	<1.5 ADC	<3 ADC	<1.5 ADC
Standby current draw (Inverter Off)	<0.25 ADC	<0.15 ADC	<0.25 ADC	<0.15 ADC
Input DC voltage range	10–16 VDC	20–32 VDC	10–16 VDC	20–32 VDC
Low battery voltage shutdown cut-off	10.5 V (selectable)	21.0 V (selectable)	10.5 V (selectable)	21.0 V (selectable)
High battery voltage shutdown cut-off	16.5 V (selectable)	33.0 V (selectable)	16.5 V (selectable)	33.0 V (selectable)

NOTE: All charging specifications are at nominal conditions: ambient temperature of 77 °F (25 °C), 120 VAC, 60 Hz input, unless otherwise specified.

Charger Specifications	Freedom SW 2012	Freedom SW 2024	Freedom SW 3012	Freedom SW 3024
Charging method	Three-stage charge (Bulk, Absorption, Float) Two-stage charge (Bulk, Absorption) The default charging method is three-stage.			
Without a battery temperature sensor	Three settings with the following temperature values: Cool 50 °F (10 °C), Warm 77 °F (25 °C), Hot 104 °F (40 °C) The default setting is Warm and it can only be changed by the factory, a dealer, or a service centre.			
With a battery temperature sensor (included)	The temperature compensation coefficients on a 12-volt battery are as follows: Flooded: 27 mV × (25 °C – BTS °C) Gel: 27 mV × (25 °C – BTS °C) AGM: 21 mV × (25 °C – BTS °C)		The temperature compensation coefficients on a 24-volt battery are as follows: Flooded: 54 mV × (25 °C – BTS °C) Gel: 54 mV × (25 °C – BTS °C) AGM: 42 mV × (25 °C – BTS °C)	
Output current (maximum)	100 ADC	50 ADC	150 ADC	75 ADC
Output voltage	12 VDC	24 VDC	12 VDC	24 VDC
Output voltage range	5–16 VDC	12–32 VDC	5–16 VDC	12–32 VDC
Equalization cycle	Automatic, Manual by Xanbus SCP		Automatic, Manual by Xanbus SCP	
Optimal charging efficiency	> 85%		> 85%	
AC input power factor (at full charge rate)	> 0.98		> 0.95	
AC input current	24A max. (including pass-thru)		24A max. (including pass-thru)	
AC input voltage	120 VAC		120 VAC	
AC input voltage range	85–140 VAC		85–140 VAC	
Dead battery charge voltage	> 5 VDC	> 12 VDC	> 5 VDC	> 12 VDC
Supported AC input types	Single input (up to 30 amps)		Split phase (up to 30 amps per line) Dual input (up to 30 amps per line)	

NOTE: All transfer specifications are at nominal conditions: ambient temperature of 77 °F (25 °C), 120 VAC, 60 Hz input, unless otherwise specified.

Transfer and General Specifications	All Models
Transfer time—utility to invert	< 20 ms
Minimum AC input voltage for transfer	85 VAC
Maximum AC input voltage for transfer	135 VAC
Minimum AC input frequency for transfer	45 Hz
Maximum AC input frequency for transfer	70 Hz
Cooling	Fan-cooled, temperature controlled.

Regulatory Approvals	All Models
Safety	CSA 107.1, UL 458 5th Ed. with marine supplement, ABYC E11 - Alternating Current and Direct Current Electrical Systems on Boats, and ABYC A31 - Battery Chargers and Inverters.
EMC	FCC Part 15, Class B Industry Canada ICES-003, Class B

xantrex™
A MISSION CRITICAL ELECTRONICS BRAND

+1 800 670 0707
+1 408 987 6030
www.xantrex.com

97-0019-01-01 Rev H

Printed in China

Smart choice for power™

xantrex™

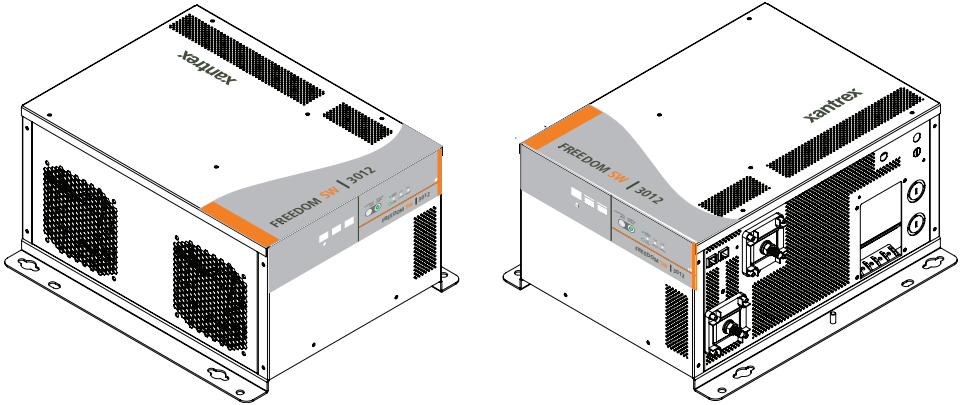

Freedom SW 3012 shown.

Freedom SW
Sine Wave Inverter/Chargers

Installation

Model Numbers

815-3012, 815-3024
815-2012, 815-2024

xanbus™
ENABLED

This guide for use by qualified personnel only.

Exclusion for Documentation

UNLESS SPECIFICALLY AGREED TO IN WRITING, SELLER

(A) MAKES NO WARRANTY AS TO THE ACCURACY, SUFFICIENCY OR SUITABILITY OF ANY TECHNICAL OR OTHER INFORMATION PROVIDED IN ITS MANUALS OR OTHER DOCUMENTATION;

(B) ASSUMES NO RESPONSIBILITY OR LIABILITY FOR LOSSES, DAMAGES, COSTS OR EXPENSES, WHETHER SPECIAL, DIRECT, INDIRECT, CONSEQUENTIAL OR INCIDENTAL, WHICH MIGHT ARISE OUT OF THE USE OF SUCH INFORMATION. THE USE OF ANY SUCH INFORMATION WILL BE ENTIRELY AT THE USER'S RISK; AND

(C) REMINDS YOU THAT IF THIS MANUAL IS IN ANY LANGUAGE OTHER THAN ENGLISH, ALTHOUGH STEPS HAVE BEEN TAKEN TO MAINTAIN THE ACCURACY OF THE TRANSLATION, THE ACCURACY CANNOT BE GUARANTEED. APPROVED CONTENT IS CONTAINED WITH THE ENGLISH LANGUAGE VERSION WHICH IS POSTED AT WWW.XANTREX.COM.

Document Part Number

97-0020-01-01

Date and Revision

Aug 2018 Rev G

Product Numbers

815-2012 (Freedom SW 2012), 815-2024 (Freedom SW 2024)
815-3012 (Freedom SW 3012), 815-3024 (Freedom SW 3024)

Contact Information

Telephone: 1 800 670 0707 (toll free North America)
1 408 987 6030 (direct)

Web: www.xantrex.com

Information About Your System

As soon as you open your product, record the following information and be sure to keep your proof of purchase.

Serial Number _____

Product Number _____

Purchased From _____

Purchase Date _____

To view, download, or print the latest revision, visit the website shown under Contact Information.

This guide for use by qualified personnel only.

About This Guide

Purpose

The purpose of this Installation Guide is to provide explanations and procedures for installing the Freedom SW Inverter/Charger.

Scope

The Guide provides safety and installation guidelines as well as information on tools and wiring. It does not provide details about particular brands of batteries. You need to consult individual battery manufacturers for this information.

Audience

The information in this Guide is intended for qualified personnel. Qualified personnel have training, knowledge, and experience in:

- Installing electrical equipment and PV power systems (up to 1000 volts).
- Applying all applicable installation codes.
- Analyzing and reducing the hazards involved in performing electrical work.
- Selecting and using Personal Protective Equipment (PPE).

Related Information

You can find more information about Xantrex-branded products and services at **www.xantrex.com**.

Important Safety Instructions

IMPORTANT: READ AND SAVE THIS INSTALLATION GUIDE FOR FUTURE REFERENCE.

This chapter contains important safety and installation instructions for the Freedom SW Inverter/Charger (Freedom SW). Each time, before using the Freedom SW, READ ALL instructions and cautionary markings on or provided with the inverter/charger, the batteries, and all appropriate sections of this guide.

NOTE: The Freedom SW contains no user-serviceable parts.

The following special messages may appear throughout this bulletin or on the equipment to warn of potential hazards or to call attention to information that clarifies or simplifies a procedure.

The addition of either symbol to a “Danger” or “Warning” safety label indicates that an electrical hazard exists which will result in personal injury if the instructions are not followed.

This is the safety alert symbol. It is used to alert you to potential personal injury hazards. Obey all safety messages that follow this symbol to avoid possible injury or death.

⚠ DANGER

DANGER indicates an imminently hazardous situation, which, if not avoided, will result in death or serious injury.

⚠ WARNING

WARNING indicates a potentially hazardous situation, which, if not avoided, can result in death or serious injury.

⚠ CAUTION

CAUTION indicates a potentially hazardous situation, which, if not avoided, can result in moderate or minor injury.

NOTICE

NOTICE indicates a potentially hazardous situation, which, if not avoided, can result in equipment damage.

IMPORTANT: These notes describe things which are important for you to know, however, they are not as serious as a caution or warning.

Safety Information

⚠ DANGER

ELECTRICAL SHOCK HAZARD

- Do not expose the Freedom SW to rain, snow, spray, or bilge water. This inverter/charger is designed for marine applications only when additional drip protection is installed in certain orientations. See the installation guide for information.
- Do not operate the inverter/charger if it has received a sharp blow, been dropped, has cracks or openings in the enclosure including if the AC terminal cover has been lost, damaged, or will not close, or otherwise damaged in any other way.
- Do not disassemble the inverter/charger. Internal capacitors remain charged after all power is disconnected.
- Disconnect both AC and DC power from the inverter/charger before attempting any maintenance or cleaning or working on any circuits connected to the inverter/charger. The **INVERTER ENABLE** button on the front panel does not function like a power switch that energizes or de-energizes the unit arbitrarily. When AC and DC power sources are connected and present, the unit is always energized.
- Do not operate the inverter/charger with damaged or substandard wiring. Make sure that all wiring is in good condition and is not undersized.

Failure to follow these instructions will result in death or serious injury.

⚠ DANGER

FIRE AND BURN HAZARD

- Do not cover or obstruct the air intake vent openings and/or install in a zero-clearance compartment.
- Do not use transformerless battery chargers in conjunction with the inverter/charger due to overheating.

Failure to follow these instructions will result in death or serious injury.

⚠ DANGER

EXPLOSION HAZARD

- Charge only properly rated (such as 12 V) lead-acid (GEL, AGM, Flooded, or lead-calcium) rechargeable batteries because other battery types may explode.
- Do not work in the vicinity of lead-acid batteries. Batteries generate explosive gases during normal operation. See note #1.
- Do not install and/or operate in compartments containing flammable materials or in locations that require ignition-protected equipment. See notes #2 and #3.
- When using Lithium-Ion batteries, ensure that the battery pack being used includes a certified Battery Management System (BMS) with safety controls.

Failure to follow these instructions will result in death or serious injury.

NOTES:

1. Follow these instructions and those published by the battery manufacturer and the manufacturer of any equipment you intend to use in the vicinity of the battery. Review cautionary markings on these products and on the engine.
2. This inverter/charger contains components which tend to produce arcs or sparks.
3. Locations include any space containing gasoline-powered machinery, fuel tanks, as well as joints, fittings, or other connections between components of the fuel system.

Precautions When Working With Batteries

⚠ WARNING

BURN FROM HIGH SHORT-CIRCUIT CURRENT, FIRE AND EXPLOSION FROM VENTED GASES HAZARDS

- Always wear proper, non-absorbent gloves, complete eye protection, and clothing protection. Avoid touching your eyes and wiping your forehead while working near batteries. See note #4.
- Remove all personal metal items, like rings, bracelets, and watches when working with batteries. See notes #5 and #6 below.
- Never smoke or allow a spark or flame near the engine or batteries.
- Never charge a frozen battery.

Failure to follow these instructions can result in death or serious injury.

NOTES:

1. Mount and place the Freedom SW Inverter/Charger unit away from batteries in a well ventilated compartment.
2. Always have someone within range of your voice or close enough to come to your aid when you work near a lead-acid battery.
3. Always have plenty of fresh water and soap nearby in case battery acid contacts skin, clothing, or eyes.
4. If battery acid contacts skin or clothing, wash immediately with soap and water. If acid enters your eye, immediately flood it with running cold water for at least twenty minutes and get medical attention immediately.
5. Use extra caution to reduce the risk or dropping a metal tool on the battery. It could spark or short circuit the battery or other electrical parts and could cause an explosion.

6. Batteries can produce a short circuit current high enough to weld a ring or metal bracelet or the like to the battery terminal, causing a severe burn.
7. When removing a battery, always remove the negative terminal from the battery first for systems with grounded negative. If it is grounded positive, remove the positive terminal first. Make sure all loads connected to the battery and all accessories are off so you don't cause an arc.

Precautions When Preparing to Charge

⚠ WARNING

EXPOSURE TO CHEMICALS AND GASES HAZARD

- Make sure the area around the battery is well ventilated.
- Make sure the voltage of the batteries matches the output voltage of the inverter/charger.
- Be careful to keep corrosion from coming into contact with your eyes and skin when cleaning battery terminals.

Failure to follow these instructions can result in death or serious injury.

NOTES:

- Study and follow all of the battery manufacturer's specific precautions, such as removing or not removing cell caps while charging, whether equalization is acceptable for your battery, and recommended rates of charge.
- For flooded non-sealed batteries, add distilled water in each cell until battery acid reaches the level specified by the battery manufacturer. This helps to purge excessive gas from cells. Do not overfill. For a battery without removable cell caps, carefully follow manufacturer's instructions.

Precautions When Placing the Inverter/Charger

NOTICE

RISK OF DAMAGE TO THE INVERTER/CHARGER

- Never allow battery acid to drip on the inverter/charger when reading gravity, or filling battery.
- Never place the Freedom SW Inverter/Charger unit directly above batteries; gases from a battery will corrode and damage the inverter/charger.
- Do not place a battery on top of the inverter/charger.

Failure to follow these instructions can damage the unit and/or damage other equipment.

Regulatory

The Freedom SW Inverter/Charger is certified to appropriate US and Canadian standards. For more information see “Regulatory Approvals” on the Specifications section in the Owner’s Guide.

The Freedom SW Inverter/Charger is intended to be used for mobile or commercial applications. This inverter/charger is designed for marine applications only when additional drip protection is installed in certain orientations.

It is not intended for other applications as it may not comply with the additional safety code requirements needed for those other applications. See “Limitations On Use” below.

⚠ WARNING

LIMITATIONS ON USE

Do not use in connection with life support systems or other medical equipment or devices.

Failure to follow these instructions can result in death or serious injury.

FCC Information to the User

This equipment has been tested and found to comply with the limits for a Class B digital device, pursuant to part 15 of the FCC Rules. These limits are designed to provide reasonable protection against harmful interference in a residential installation. This equipment generates, uses, and can radiate radio frequency energy and, if not installed and used in accordance with the instructions, may cause harmful interference to radio communications.

However, there is no guarantee that interference will not occur in a particular installation. If this equipment does cause harmful interference to radio or television reception, which can be determined by turning the equipment off and on, the user is encouraged to try to correct the interference by one or more of the following measures:

- Reorient or relocate the receiving antenna.
- Increase the separation between the equipment and receiver.
- Connect the equipment into an outlet on a circuit different from that to which the receiver is connected.
- Consult the dealer or an experienced radio/TV technician for help.

⚠ CAUTION

Unauthorized changes or modifications to the equipment could void the user’s authority to operate the equipment.

This guide for use by qualified personnel only.

End of Life Disposal

The Freedom SW is designed with environmental awareness and sustainability in mind. At the end of its useful life, the Freedom SW can be decommissioned and disassembled. Components which can be recycled must be recycled and those that cannot be recycled must be disposed of according to local, regional, or national environmental regulations.

Many of the electrical components used in the Freedom SW are made of recyclable material like steel, copper, aluminum, and other alloys. These materials can be auctioned off to traditional scrap metal recycling companies who resell reusable scraps.

Electronic equipment such as the circuit boards, connectors, and fuses can be broken down and recycled by specialized recycling companies whose goal is to avoid having these components end up in the landfill.

For more information on disposal, contact Xantrex.

Contents

Introduction

The Installation Guide provides detailed information for installing the Freedom SW Inverter/Charger and the battery temperature sensor, wiring the inverter/charger to the AC and DC circuits, and connecting the inverter/charger to the Xanbus system.

The Freedom SW is a Xanbus-enabled device that typically powers the Xanbus system.

This Installation Guide provides:

- Safety instructions that must be observed during installation
- A typical Xanbus system diagram (if applicable)
- Information on additional required AC and DC components.
- A list of installation tools and materials
- Detailed procedures for a typical installation

This guide for use by qualified personnel only.

Materials List

The Freedom SW ships with the following items:

- One Freedom SW unit
- Owner's and Installation Guides and mounting template
- Battery Temperature Sensor (BTS)
- DC terminal covers (one red, one black) with two sets of #6-32 screws
- Two Xanbus network terminators
- Two sets of 5/16"-18 nuts and washers for the DC terminals

NOTE: If any of the items are missing, contact customer service or any authorized Xantrex dealer for replacement. See "Contact Information" on page i.

IMPORTANT: Keep the carton and packing material in case you need to return the Freedom SW for servicing.

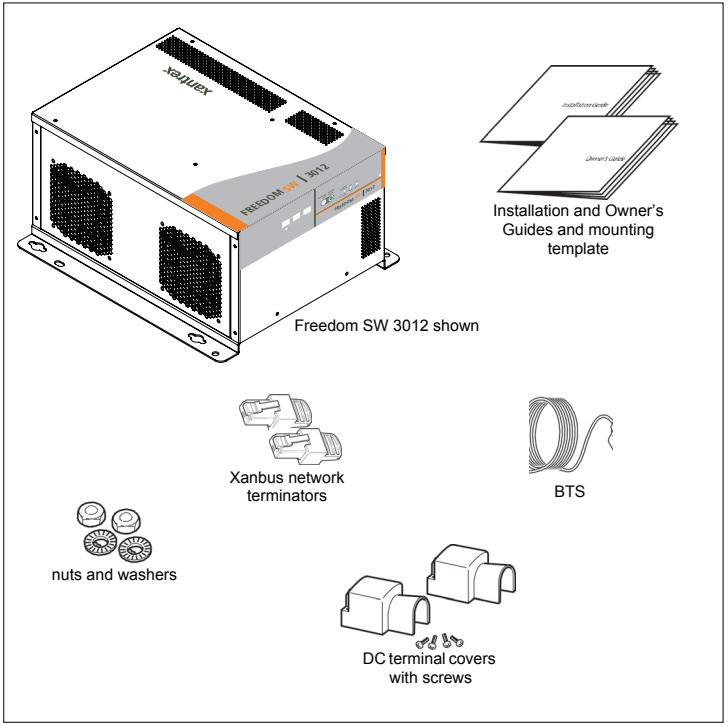

Figure 1 Materials List

Installation Information

Before You Begin the Installation

Before beginning your installation:

- Read the entire Installation Guide so you can plan the installation from beginning to end.
- Assemble all the tools and materials you require for the installation.
- Review the Important Safety Instructions on page iii.
- Be aware of all safety and electrical codes which must be met.

⚠ DANGER

ELECTRICAL SHOCK AND FIRE HAZARDS

- All wiring should be done by qualified personnel to ensure compliance with all applicable installation codes and regulations.
- Disconnect all AC and DC power sources.
- Disable and secure all AC and DC disconnect devices and automatic generator starting devices.

Failure to follow these instructions will result in death or serious injury.

Installation Codes

Applicable installation codes vary depending on the specific location and application of the installation. Some examples are:

- U.S. National Electrical Code (NEC)
- Canadian Electrical Code (CEC)
- Canadian Standards Association (CSA) and RV Industry Association (RVIA) for installation in RVs
- ABYC E11 - Alternating Current and Direct Current Electrical Systems on Boats
- ABYC A31 - Battery Chargers and Inverters

This guide for use by qualified personnel only.

Xanbus System

The Xanbus system includes the Freedom SW and other Xanbus-enabled devices. The Freedom SW is the device in a Xanbus system that typically provides network power—500 mA at 12 volts DC. All of the Xanbus-enabled devices, such as the Freedom SW, the SCP, and the AGS are able to communicate their settings and activity to each other.

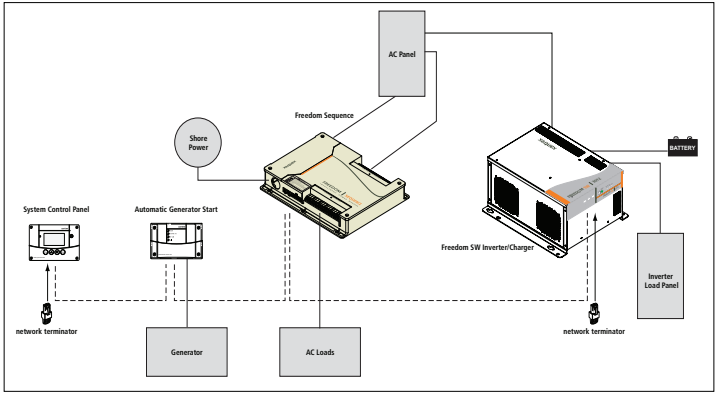

Figure 2 Typical Xanbus System Diagram

The Xanbus-enabled designation (see below) means that this product works on a Xanbus network. Xanbus-enabled products are:

- Simple to operate and routine tasks are automated.
- Controlled by software that eliminates analog signalling errors.
- Less susceptible to interference and line loss.
- Upgradable through new software releases.

xanbus
ENABLED

For detailed instructions and a complete list of Xanbus-enabled devices, visit **www.xantrex.com**

Xanbus-enabled Products and Accessories

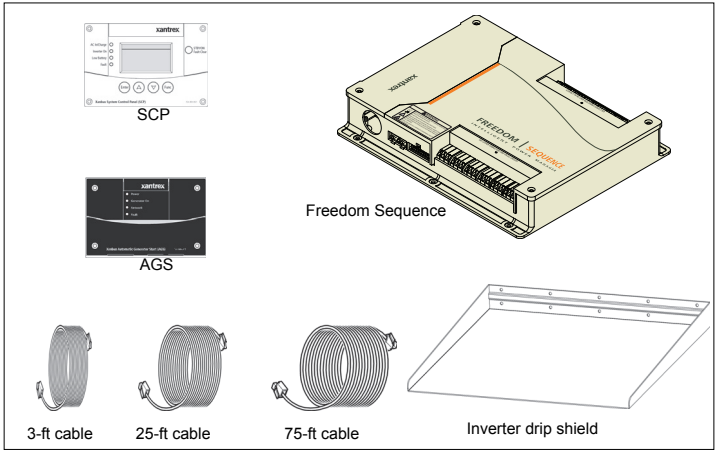

Product/Accessory (Not Shown)	Product Number/s
Freedom Sequence Intelligent Power Manager	809-0912 / 809-0913
Xanbus System Control Panel (SCP)	809-0921
Xanbus Automatic Generator Start (AGS)	809-0915
3-ft network cable (0.9 m)	809-0935
25-ft network cable (7.6 m)	809-0940
75-ft network cable (22.9 m)	809-0942
Inverter drip shield	808-9004
Freedom SW On/Off Switch	808-9002
GFCI receptacles (available on 12 VDC models only)	808-9003
Stacking cable	808-9005

Planning the Installation

This section provides information to help you plan for a basic installation of the Freedom SW.

As your system configuration is determined, record the details in “Information About Your System” in the *Freedom SW 3000 Sine Wave Inverter/Charger Owner’s Guide*.

Two Key Performance Factors

Two key factors in particular will have a major impact on system performance.

Size and Length of DC Cables

To select the appropriate size and length of DC cables, see “DC Cabling” on page 16.

The DC cables should be as short as possible and large enough to handle the required current, in accordance with the electrical codes or regulations applicable to your installation. If there are long battery cables which are in excess of 10 feet each and not of sufficient size, the voltage drop across the cables will have a negative impact on overall system performance.

Mounting Location of the Freedom SW

To choose an appropriate location for mounting the inverter/charger, see “Step 1: Choosing a Location for the Inverter/Charger” on page 22.

AC, DC, and Network Components

For a successful installation, you need to plan for AC, DC, and network components of the power system. The AC and DC components are described in this section and illustrated in Figure 3 on page 8.

AC components include:

- AC Input for Dual AC Line Models,
  AC Input for Single AC Line Models
- AC Loads
- AC Disconnect and Over-Current Protection Device
- Distribution Panels
- AC Wiring
- AC Output Neutral Bonding

DC components include:

- Batteries
- DC Cabling
- DC Disconnects and Over-Current Devices
- DC Grounding

Network considerations for Freedom SW only include:

- Cables, connectors, network connectors, and terminators for the SCP and Automatic Generator Start, if installing.

  Detailed information on planning and installing your network is available in the *Xanbus System Installation Guide.* Refer to the system guide to determine the type of network layout to install, as well as guidelines for installing the network. This guide is available for download at **www.xantrex.com**

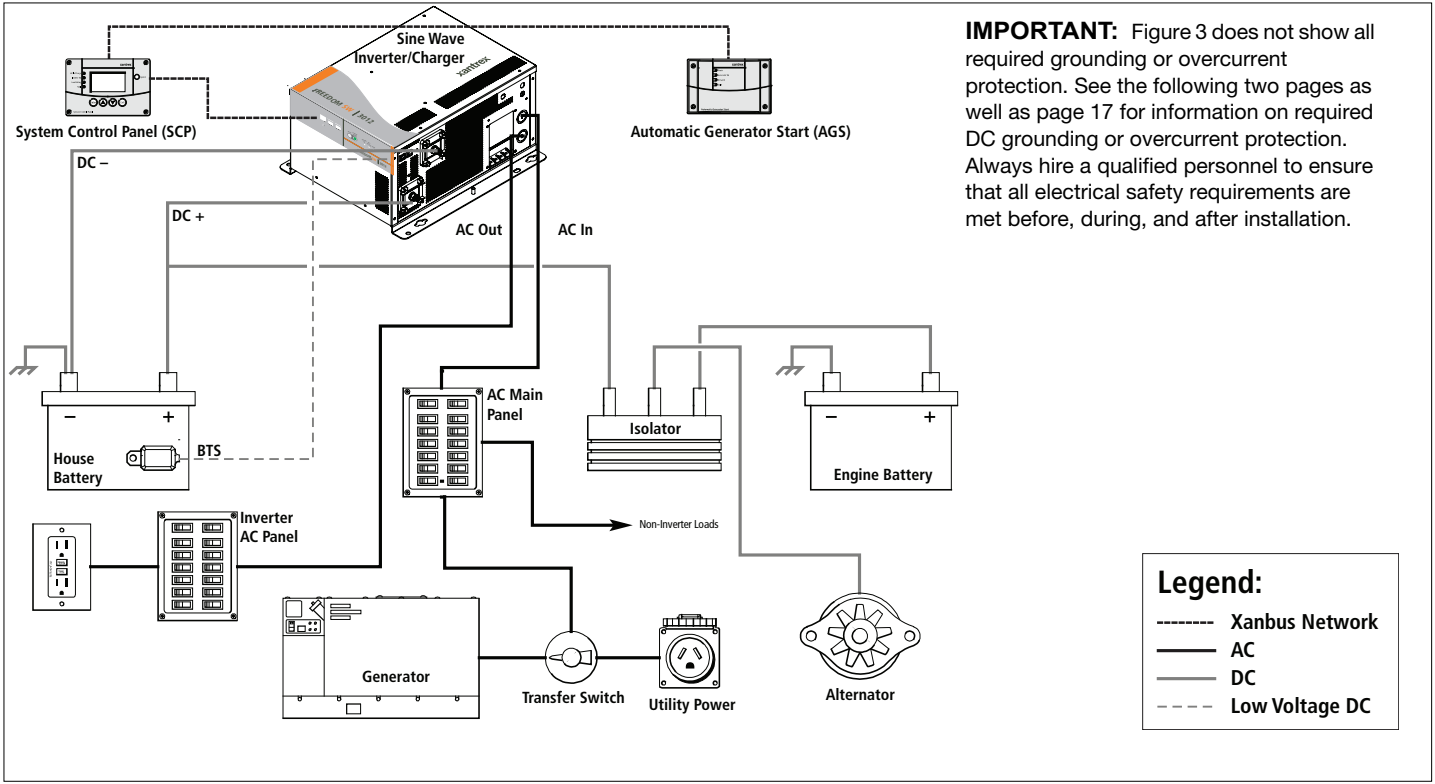

IMPORTANT: Figure 3 does not show all required grounding or overcurrent protection. See the following two pages as well as page 17 for information on required DC grounding or overcurrent protection. Always hire a qualified personnel to ensure that all electrical safety requirements are met before, during, and after installation.

Figure 3 Typical Recreational Vehicle Electrical System

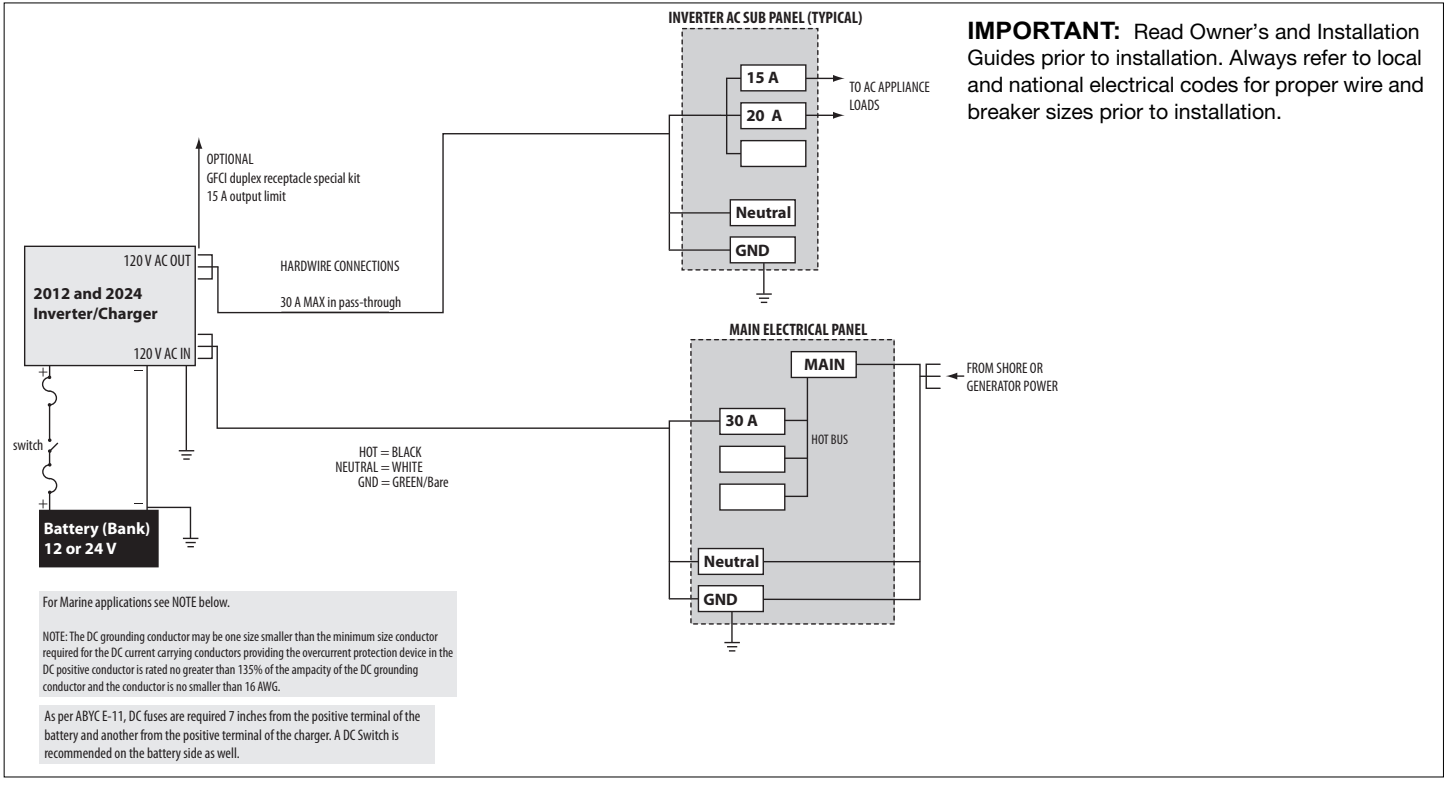

Figure 4 Wiring and Breakers Block Diagram for Freedom SW 2012 / 2024

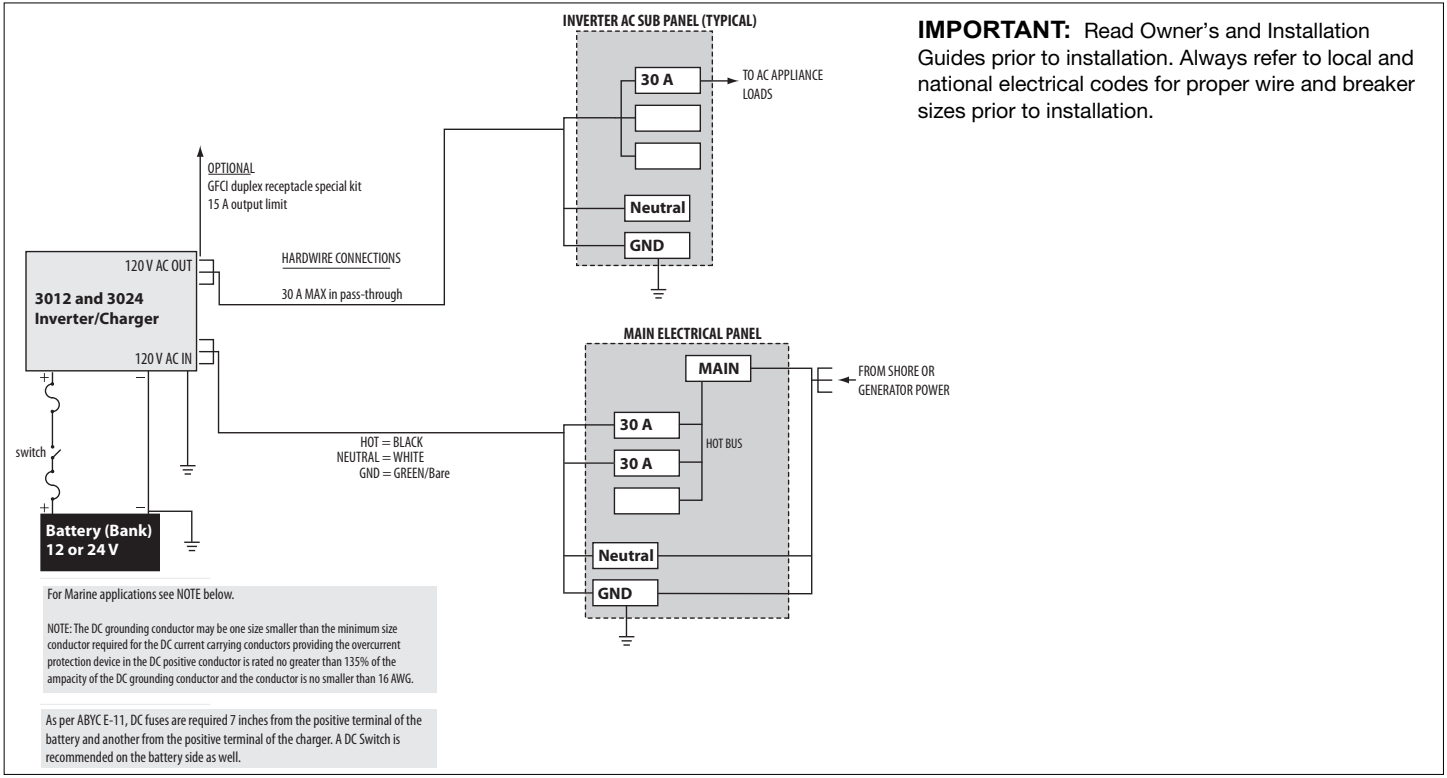

IMPORTANT: Read Owner's and Installation Guides prior to installation. Always refer to local and national electrical codes for proper wire and breaker sizes prior to installation.

Figure 5 Wiring and Breakers Block Diagram for Freedom SW 3012 / 3024

AC Components

NOTE: Unless otherwise referenced specifically by product name, the components refer to all models of Freedom SW inverter/chargers.

AC Input for Single AC Line Models

AC input (to a single AC line model such as Freedom SW 2012 inverter/charger) can be supplied from a single-phase 120-volt 60-Hz AC source such as the utility grid (power company), a generator, or the output of a transfer switch.

AC Input for Dual AC Line Models

AC inputs (to a dual AC line model such as Freedom SW 3012 inverter/charger) can be supplied from a split-phase or dual-input AC source such as the utility grid (power company), a generator, or the output of a transfer switch. The Freedom SW can be operated from the following types of 120 volt 60 Hz AC sources:

- **Split phase**: This source type has two lines, one neutral, and one ground. The two 120 volts AC lines are 180 degrees out of phase with each other, so that the two voltages total to 240 volts AC line to line. The voltage between each line and neutral is still 120 volts AC, and the voltage between the neutral and ground is approximately zero.

  Because the two lines are out of phase, the currents from each line subtract in the neutral, and the neutral current will be approximately zero if the loads are equal. For example, if Line 1 is supplying 20 amps and Line 2 is supplying 15 amps, the current in the neutral will be 5 amps.

- **Dual input**: This source type has two line inputs, one neutral, and one ground. Unlike the split-phase type, the two lines are in phase (not out of phase), and must come from the same source. The voltage between the two lines is zero. The voltage between each line and the neutral is 120 volts AC, and the voltage between the neutral and ground is approximately zero.

  Because the two lines are in phase, the currents from each line add together in the neutral. For example, if Line 1 is supplying 20 amps and Line 2 is supplying 15 amps, the current in the neutral will be 35 amps.

AC Output

The output voltage on Freedom SW inverter/chargers is 120Vac. The AC output line configuration depends on the model.

- Single AC Line models have a Single Input and Single Output line - (SI-SO) configuration.
- Dual AC Line models support Dual Input and Dual Output lines - (DI-DO) configuration.

AC Loads

The Freedom SW is intended to power loads consisting of 120 volts AC appliances.

In Invert mode, the Freedom SW connects L1 and L2 output lines together to provide 120 volts AC to loads on either line. In AC Bypass mode, the source connected to the AC input is passed through to the load. Because of the way invert mode operates, only 120 volts AC appliances can be connected to the Freedom SW output.

AC Disconnect and Over-Current Protection Device

To meet CSA, UL, and electrical code requirements, and to protect system wiring, the AC inputs and outputs of the inverter/charger must be provided with overcurrent protection on both the AC input and output. This protection may be a circuit breaker or a fuse with a disconnect device (for simplicity the following refers to breakers). Refer to your applicable installation codes and the following requirements:

AC Input Protection

The breakers protecting the AC input of the Freedom SW must be approved for use on 120 volts AC branch circuits, and must be located in each Line. The breakers must be rated as shown below:

- **Split-phase input**: No more than 30 amps max in each line.
- **Dual input**: The neutral current in a dual-input system is the sum of the two line currents, and must be limited to 60 amps maximum to protect the transfer relay in the Freedom SW. Each breaker must not exceed 30 amps, and the total (sum) of the ratings of the two breakers must not exceed 60 amps.

AC Output Protection

The breaker between the Freedom SW AC output and the AC loads must be rated to protect the AC output wire size used. If the AC output wiring is based on the full 30-amp pass-through rating, then a 30-amp output breaker is acceptable. If the AC output wiring is smaller, then the breaker size will have to be smaller as well, in accordance with applicable electrical installation codes.

GFCI Requirements

A GFCI (ground fault circuit interrupter) is a device that de energizes a circuit when a current to ground exceeds a specified value that is less than that required to open the circuit breaker. GFCIs are intended to protect people from electric shocks and are usually required in wet or damp locations.

Installation in recreational vehicles requires GFCI protection of certain branch circuits. Consult all applicable codes.

Tested GFCIs Compliance with UL standards requires that the manufacturer test and recommend specific GFCIs for use on the output of the inverter. Table 1 lists models that have been tested and will function properly when connected to the AC output of the Freedom SW.

Table 1 Tested GFCI Models

Manufacturer	Model Number
Hubbell	GF15WLA
Leviton	N7599-GY
Pass & Seymour	1595-W

Disconnect Devices

Each system requires a method of disconnecting the AC circuits. If the overcurrent protection device is a circuit breaker, it will also serve as the disconnect. If fuses are used, separate AC disconnect switches will be needed between the source and the fuses.

Distribution Panels

Some systems incorporate distribution panels both ahead of the inverter/charger (the AC source panel) and between the inverter/charger and the loads (the AC load panel). The AC source panel includes a main circuit breaker, which serves as overcurrent protection for the panel. Additional circuit breakers serve individual circuits, one of which serves the inverter/charger.

AC Wiring

Definition AC wiring includes input wiring (all the wires and connectors between the AC source and the inverter/charger input) and output wiring (all the wires between the inverter/charger and the AC load panels, circuit breakers, and loads).

Type The type of wiring required varies according to the electrical codes or regulations applicable to your installation. For RV applications, this may be solid wire in multi-conductor cables, but stranded wire is required if single conductors are used. All wiring must be rated 90 °C or higher.

Size of AC Input Wiring Wire size must be coordinated with the overcurrent protection provided ahead of the wire involved, in accordance with the electrical codes or regulations applicable to your installation.

Therefore, the wiring used between the AC input circuit breaker and the inverter/charger input must be sized to match the input breaker rating.

Table 2 AC Wire Size In and Out of the Inverter/Chargers

MODELS	815-3012 / 815-3024		815-2012 / 815-2024
	Split phase	Dual input	
Breaker Size Used	30 amps per line	30 amps per line	30 amps
Wire Size	No. 10 AWG	No. 6 AWG	No. 10 AWG
Color Coding	**L1**: black: **N**: white **L2**: red **Gnd**: green	**L1**: red or black **N**: white **L2**: red or black **Gnd**: green	**L**: red or black **N**: white **G**: green

For dual input, the wire may be red or black; consult the documentation provided with the AC source (utility or generator).

Size of AC Output Wiring Wire size must be coordinated with the current the wiring will carry. This current may be determined by the 25-amp (Freedom SW 3012) and 20-amp (Freedom SW 2012) maximum inverter current, or by the bypass current, which is determined by the overcurrent protection provided ahead of the Freedom SW.

Some conditions for Freedom SW:

- If the input wiring is split-phase, the output wiring must be sized to coordinate with the breakers used on the input. Refer to your applicable installation codes.
- If the input wiring is dual-input and the output wiring is single-input, the following rules apply: If the input breaker on L1 is greater than 25 amps, the wire size must be coordinated for that amperage. If the input breaker on L1 is less than 25 amps, the wire size must be coordinated for 25 amps. The wire size must not be sized for anything lower than 25 amps.
- If both the input and the output wiring are dual-input, the output wiring for each line (L1 and L2) must be calculated separately, following these rules: If the input breaker on the specific line is greater than 25 amps, the wire size for that line and its neutral must be coordinated for that amperage. If the input breaker on the specific line is less than 25 amps, the wire size for that line and its neutral must be coordinated for 25 amps. The wire size must not be sized for anything lower than 25 amps.

Size of Wiring Downstream of the AC Output Breaker

The wiring used between the AC output breaker and your loads must be sized to match the output breaker.

AC Output Neutral Bonding

The AC source must have its neutral conductor bonded to ground.

Bonding system The Freedom SW provides a system that automatically connects the neutral conductor of the inverter's AC output circuit to safety ground ("bonding" it) while the inverter/charger is inverting, and disconnects it ("unbonding" it) when the inverter/charger is connected to external AC power. This system is designed to conform to installation codes that require AC sources such as inverters and generators to have their neutral conductors tied to ground at the source of power in the same way that the neutral conductor from the utility is tied to ground. These same codes specify that the neutral can only be connected to ground in one place at any one time.

Suitability This automatic neutral-to-ground bonding system requires AC input sources with bonded neutral. This will be the case in most situations: in a utility feed, at an external AC hook-up, or a generator with a bonded neutral. If not, have an electrician look into bonding the source's neutral to ground. See also "AC Input and Output Isolation" on page 28.

DC Components

Batteries

The Freedom SW system requires a 12- or 24-volt (depending on the model), lead-acid deep-cycle battery or group of batteries to provide the DC current that the inverter/charger converts to AC power. The battery may be a flooded, gel, or AGM type.

See "Battery Information" on page 63 for information on:

- Estimating the battery size that will meet your requirements.
- Designing battery banks.
- Restrictions on the size of appliances.

For information on cabling and hooking up batteries, see "Battery Cabling and Hook-up Configurations" on page 69.

For detailed information about specific brands of batteries, consult individual battery manufacturers.

DC Cabling

Definition DC cabling includes all of the cables and connectors between the batteries, the DC disconnect and overcurrent protection device, and the inverter/charger.

Type All installations require multi-strand insulated cables. The DC cables must be copper and must be rated 75°C minimum.

Size and Length See Table 3 for required DC cable length, cable size and required fuse size for the Freedom SW. Wire size is usually marked on the cables.

Table 3 Minimum Recommended Battery Cable Sizes for Copper Conductors Rated 75C

		Conduit	Free Air
Model	**Typical Amps (A)**	**Cable Length < 10 ft.**	**Cable Length < 5 ft.**
Freedom SW 2012	250	250 kcmil	2/0 AWG

Table 3 Minimum Recommended Battery Cable Sizes for Copper Conductors Rated 75C

		Conduit	Free Air
Model	**Typical Amps (A)**	**Cable Length < 10 ft.**	**Cable Length < 5 ft.**
Freedom SW 3012	320	400 kcmil	4/0 AWG
Freedom SW 2024	120	1 AWG	4 AWG
Freedom SW 3024	180	3/0 AWG	1 AWG

IMPORTANT: Longer cables may cause the inverter to shut down under a heavy load.

⚠ WARNING

FIRE HAZARD

Undersized cables will overheat. Consult local electrical codes to determine minimum required size.

Failure to follow these instructions can result in death or serious injury.

DC Disconnects and Over-Current Devices

The DC circuit from the battery to the inverter/charger must be equipped with a disconnect and overcurrent protection device. Refer to your applicable installation code for guidance.

Type This device usually consists of a circuit breaker, a "fused-disconnect," or a separate fuse and DC disconnect. Do not confuse AC circuit breakers with DC circuit breakers. They are not interchangeable.

Rating The rating of the fuse or breaker must be matched to the size of cables used in accordance with the applicable installation codes.

Location The breaker or fuse and disconnect should be located as close as possible to the battery in the positive cable. Applicable codes may limit how far the protection can be from the battery.

Table 4 Recommended Fuse Sizes[a]

Model	Fuse Size (A)
Freedom SW 2012	275
Freedom SW 3012	350
Freedom SW 2024	150
Freedom SW 3024	200

a. Based on National Electrical Code (NEC) requirements. The NEC requires that the cables be protected by a fuse or breaker rated to match the cables' ampacity at 75 °C.

Marine Applications[1] A charger needs to be equipped with a disconnect and an over-current protection device, usually within seven inches (18 cm) of each battery's positive terminal and another over-current protection device seven inches (18 cm) near the charger's positive terminal.

DC Grounding

Recreational Vehicles The inverter/charger DC (chassis) ground terminal needs to be connected to the vehicle chassis by a minimum No. 8 AWG copper conductor that is either insulated (green) wire rated 75 °C or bare copper.

Marine Applications[2] The DC grounding conductor may be one size smaller than the minimum size conductor required for the DC current carrying conductors providing the overcurrent protection device in the DC positive conductor is rated no greater than 135% of the ampacity of the DC grounding conductor and the conductor is no smaller than 16 AWG.

1.Per ABYC E-11.
2.Per ABYC A-31.

Unpacking and Inspecting the Freedom SW Inverter/Charger

⚠ CAUTION

HEAVY ITEM

The Freedom SW Inverter/Charger is heavy (see “Inverter/Charger Physical Specifications” on page 62). The unit is too heavy for one person to safely lift and mount. It is recommended that two people lift and mount the unit. Always use proper lifting techniques during installation to prevent personal injury.

Failure to follow these instructions can result in minor or moderate injury

To unpack and inspect:

IMPORTANT: Keep the carton and packing material in case you need to return the Freedom SW for servicing.

1. Unpack the unit and check the materials list. If anything is missing from the shipping box, contact Customer Service. See “Contact Information” on page i.
2. Record the serial number of the Freedom SW and other purchase information for any future warranty issues. You will be asked for this product information if you need to call Customer Service.
3. Save your purchase receipt to use as proof-of-purchase. This receipt is required if the inverter/charger should need warranty service.
4. Save the original shipping carton and packing materials. If the inverter/charger needs to be returned for service, it should be shipped in the original carton. Packing the Freedom SW in the original shipping carton is also a good way to protect the inverter/charger if it ever needs to be moved.

Installation Tools and Materials

Tools

You will need the following tools to install the Freedom SW and the battery temperature sensor.

- ❒ Wire stripper
- ❒ Crimping tools for fastening lugs and terminals on DC cables
- ❒ Phillips screwdriver: #2
- ❒ Slot screwdriver (1/4" wide blade max.)
- ❒ Needle-nose pliers
- ❒ Wrench for DC terminals: 9/16"

NOTE: For a list of tools and materials required to install the network, refer to the *Xanbus System Installation Guide,* which is available for download at **www.xantrex.com**.

Materials

You will need the following materials to complete your installation:

- ❒ Strain-relief clamp(s) for AC cables (not provided): 3/4" and/or 1"
- ❒ DC battery cables
- ❒ Lugs for DC cables (for 3/8" stud size)
- ❒ Copper wire for DC grounding: No. 8 AWG. See “DC Grounding” on page 18
- ❒ Lugs for DC grounding cable (for 1/4" stud size)
- ❒ AC and DC disconnect switches and overcurrent protective devices and connectors as required. See page 16.
- ❒ AC output and input wire. See Figure 3 on page 8.
- ❒ If the AC ground wire is stranded, each ground wire requires a ring terminal
- ❒ Six 1/4" pan-head steel screws[1] to mount the unit to a wall
- ❒ Inverter drip shield (PN: 808-9004) if mounting in UL458-compliant marine installation

1.Screw length depends on wall material and thickness.

Installing the Inverter/Charger

Overview

This section provides detailed information on installing the Freedom SW. The overall procedure is divided into eight steps:

This guide for use by qualified personnel only.

Step 1: Choosing a Location for the Inverter/Charger

⚠ DANGER

FIRE AND EXPLOSION HAZARD

Do not install this equipment in compartments containing batteries or flammable materials, or in locations that require ignition-protected equipment because this equipment contains components that could produce arcs or sparks. This includes any space containing gasoline-powered machinery, fuel tanks, or joints, fittings, or other connections between components of the fuel system.

Failure to follow these instructions will result in death or serious injury.

⚠ CAUTION

HEAT HAZARD

Do not cover or obstruct the ventilation openings. Do not install this equipment in a compartment with limited airflow. Overheating may result.

Failure to follow these instructions can result in minor or moderate injury

The inverter should only be installed in a location that meets the following requirements:

Ventilated

Do not operate the inverter/charger in a closed-in area or restrict ventilation in any way. The inverter/charger requires air circulation to maintain optimum operating temperature and provide best performance. If the unit has inadequate ventilation, it may shut down due to overheating.
The air vented through the openings should also have a path to circulate away from the inverter/charger.

Dry

Do not allow water or other fluids to drip or splash on the inverter/charger. Do not expose to rain, snow or water.
Use inverter drip shield (PN: 808-9004) for UL458-compliant marine installations.

Cool

Normal air temperature should be between 32 °F and 140 °F (0 °C and 60 °C)—the cooler the better within this range.

Clearance

Allow as much space around the inverter/charger as possible. It is recommended that other objects and surfaces be at least 3 inches (76 mm) away from the ventilation openings for best performance.

Safe

Locate the inverter/charger away from battery in a separate well ventilated compartment. Do not install the inverter/charger in any compartment containing flammable gases or liquids like gasoline.

Close to battery compartment

The length and size of your DC cables will affect performance. Use the DC cables recommended in Table 3 on page 16. The unit should **not** be installed in the battery compartment due to the possible presence of explosive hydrogen gas from the batteries.

Protected from battery acid and gases

Never place the inverter/charger directly above the batteries—gases from battery will corrode and damage the inverter/charger. If the inverter/charger is installed in a compartment above the batteries, make sure there is a solid, gas-impermeable wall dividing the two compartments.
However, flooded or wet cell batteries produce flammable gases that can potentially be ignited and therefore a safety hazard. If the batteries are sealed (no caps to add water), then the Freedom SW can be mounted above the batteries if so desired (a position outlined in this guide).
Never allow battery acid to drip on the inverter/charger or its wiring when filling the batteries or reading their specific gravity.

Orientation

To meet regulatory requirements, the Freedom SW must be mounted in one of the approved mounting orientations. See Figure 6 on page 25.

Step 2: Mounting the Inverter/Charger

Considerations

Before mounting the Freedom SW, take the following two factors into account.

1. The weight of the Freedom SW inverter/charger requires two people to install it.
2. Mounting considerations are shown in Figure 6 on page 25.

⚠ CAUTION

HEAVY LOAD HAZARD

- The Freedom SW Inverter/Charger is heavy (see "Inverter/Charger Physical Specifications" on page 62). Do not lift the unit by yourself. Use two people to lift and mount the unit. Always use proper lifting techniques during installation to prevent injury.
- Make sure that the wall can support a load of up to 70 lbs (32 kg).
- Do not install in plasterboard (drywall) using dywall anchors. Attach the unit to wall studs. Use appropriately sized screws depending on wall material and thickness.

Failure to follow these instructions can result in minor or moderate injury

The Freedom SW mounting orientations are shown in Figure 6 on page 25.

Mount your inverter/charger before you connect any wires or cables.

To mount the inverter/charger:

1. Remove the inverter/charger from its shipping container.
2. Verify that all components are present.
3. Select an appropriate mounting location and orientation. To meet regulatory requirements, the Freedom SW must be mounted in one of the orientations shown in Figure 6 on page 25.
4. Mark the position of the mounting holes.
5. Pilot drill the six mounting holes.
6. Fasten the inverter/charger to the mounting surface with six
   1/4" pan-head steel screws.

Figure 6 Mounting Orientations

Orientation	Approved Mounting Orientation?	Comment
Desktop Mount  A	A - Yes	A - Suitable only for non-marine applications with no risk of condensation or dripping water.
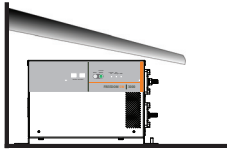 B	B - Yes when used with inverter drip shield (PN: 808-9004) for UL458-compliant marine installations.	B - The drip shield is installed on top of the inverter with some clearance. See “Drip Shield Placement (Desktop Mount)” on page 76.
Upside-down Mount 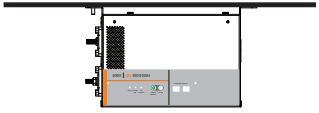	Yes (for non-marine applications only)	Suitable only for non-marine applications with no risk of condensation or dripping water.
Wall Mount DC on Left 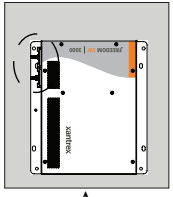 A	A - Yes	A - On a vertical surface with DC terminals facing left.
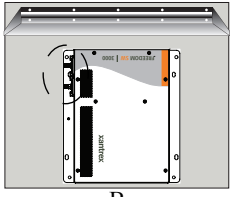 B	B - Yes when used with inverter drip shield (PN: 808-9004) for UL458-compliant marine installations.	B - On a vertical surface with DC terminals facing left with the front panel facing up. The drip shield is installed on top of the inverter with some clearance. See “Drip Shield Placement (Inverter Front Panel Facing Up)” on page 76.

Orientation	Approved Mounting Orientation?	Comment
Wall Mount DC on Right 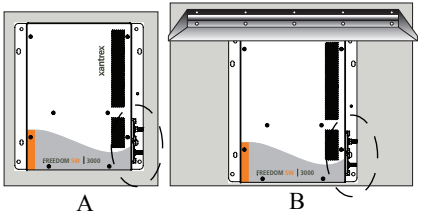	A - Yes B - Yes when used with an inverter drip shield (PN: 808-9004) for UL458-compliant marine installations.	A - On a vertical surface with DC terminals facing right. B - On a vertical surface with DC terminals facing right with the front panel facing down. The drip shield is installed directly on top of the inverter. See “Drip Shield Placement (Inverter Front Panel Facing Down)” on page 77.

Orientation	Approved Mounting Orientation?	Comment
Wall Mount DC Up 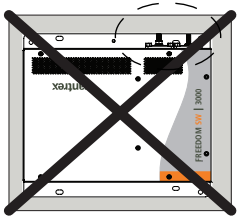	No	Not acceptable. This orientation does not meet regulatory requirements.
Wall Mount DC Down 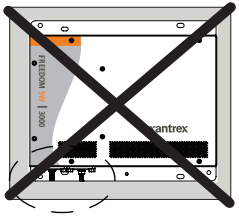	No	Not acceptable. This orientation does not meet regulatory requirements.

This guide for use by qualified personnel only.

Step 3: Connecting the AC Input and AC Output Wires

⚠ DANGER

FIRE, ELECTRICAL SHOCK, AND ENERGY HAZARDS

Make sure wiring being connected to the inverter/charger is de-energized by a breaker or switch upstream. Lockout/Tagout is a recommended practice by many electrical contractors. Always lockout and tag disconnect devices before making connections. All wiring must be done in accordance with local and national electrical wiring codes.

Failure to follow these instructions will result in death or serious injury.

General AC Wiring Considerations

AC and DC Wiring Separation Do not mix AC and DC wiring in the same conduit or panel. Consult the applicable installation code for details about DC wiring and AC wiring in vicinity to each other.

AC Input and Output Isolation The AC input and output circuits of this inverter/charger are isolated from each other when in invert mode to ensure safe operation. This isolation must be maintained in the installation, by being sure not to connect AC input and output wiring to a common point. For example, do not route the AC input and output neutrals to a common neutral bus. It is highly recommended to use a separate inverter load panel to distribute power to inverter loads. All wiring to this panel must be through the inverter/charger and none to the main panel upstream of the inverter/charger.

IMPORTANT: wiring the output inverter to back to the main panel could result in ground bonding to occur in multiple locations in contravention of applicable wiring codes and may result in nuisance tripping of Ground fault protection equipment. All wiring must be performed by a qualified electrician.

AC Wiring Compartment For your reference, the AC wiring compartment is shown in Figure 7 on page 29.

AC Knockouts There are two dual 1.0"/ 3/4" trade-size knockouts on the side panel for AC wiring. Use the same trade size of strain relief as the trade size of the knockout(s) you are using.

AC Wiring Terminals The AC wiring terminals accept cables of a specific size. See “AC Wiring” on page 14 for required sizes.

Connecting AC Input Wires

Figure 7 shows the wiring compartment, which contains a grounding bus (used to wire the AC input and output ground wires) and a terminal block (used to wire the AC input and AC output connections).

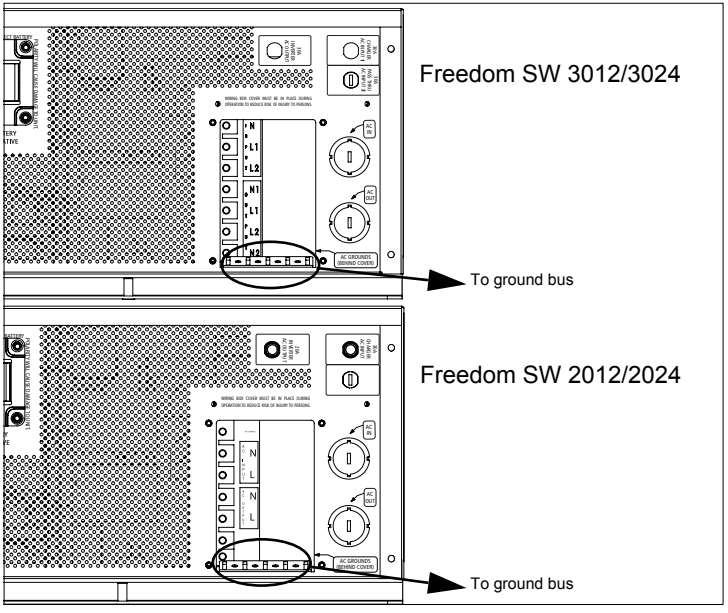

Figure 7 AC Wiring Compartment

This guide for use by qualified personnel only.

NOTICE

EQUIPMENT DAMAGE

Connect wires to the correct terminals in the terminal block that is split into INPUT and OUTPUT sections. Damage may occur if the unit is wired incorrectly to the wrong terminals.
Do not remove or loosen factory installed wiring.

Failure to follow these instructions can damage the unit and/or damage other equipment.

When making the AC input and AC output connections, observe the correct color code for the appropriate AC wire, as described in Table 2 on page 14.

To make the AC input connections:

1. Locate the wiring compartment cover panel and remove the four screws.
2. Remove the cover panel from the unit to access the wiring compartment.
3. Remove one of the AC knockouts from the front or side of the unit. Do not leave the knockout inside the wiring compartment.
4. Install a strain-relief clamp in the AC knockout.
5. Run the AC wiring through the strain-relief clamp.
6. Strip approximately 2 inches (50 mm) off the jacket from the AC cable and separate the wires.
7. Using a 1/4" blade slot screwdriver, loosen the terminal screws on the terminals. Do not remove the screws.
8. Connect the line and neutral wires to the input terminals (labeled AC Input on the terminal block, Figure 7 on page 29).

   Freedom SW 3012/3024:
   Connect Line 1 to **L1**, Neutral to **N**, Line 2 to **L2**.

   Freedom SW 2012/2024:
   Connect Line to **L**, Neutral to **N**, Ground to **G**.
9. Tighten the terminal screws. Leave some slack wire inside the wiring box.
10. Connect the ground wires to a free position on the ground bus, Figure 7 on page 29. If solid ground wire is being used, the wire can be connected directly under the screw heads. If stranded ground wire is being used, ring terminals must also be used.
11. Secure the strain-relief clamp on the AC input cable jacket.

Connecting the AC Output Wires

NOTICE

EQUIPMENT DAMAGE

Do not connect the output of the inverter to any AC source.

Failure to follow these instructions can damage the unit and/or damage other equipment.

To make the AC output wiring connections:

1. Remove one of the AC knockouts from the front or side of the unit. Do not leave the knockout inside the wiring compartment.

IMPORTANT: The applicable installation code may not allow you to run the AC input and AC output wiring through the same AC knockout.

2. Install a strain-relief clamp in the AC knockout and run the AC wiring through the strain-relief clamp.
3. Strip approximately 2 inches (50 mm) off the jacket from the AC cable and separate the wires.
4. Using a 1/4" blade slot screwdriver, loosen the terminal screws on the AC output terminals. Do not remove the screws.
5. Connect the line and neutral wires to the output terminals (labeled AC Output on the terminal block, Figure 7 on page 29) as follows:

Freedom SW 3012/3024 Terminals	Line for Dual Output	Lines for Single Output
N2	Neutral 2	Unused
L2	Line 2	Unused
N1	Neutral 1	Neutral
L1	Line 1	Line

Freedom SW 2012/2024 Terminals	Lines for Output
N	Neutral
L	Line

6. Tighten the terminal screws. Leave some slack wire inside the wiring box.
7. Connect the ground wires to a free position on the ground bus, Figure 7 on page 29. If solid ground wire is being used, the wire can be connected directly under the screw heads. If stranded ground wire is being used, ring terminals must also be used.

8. Secure the strain-relief clamp on the AC output cable jacket.
9. Attach the wiring compartment cover panel and tighten the four screws.
10. Connect the outgoing AC wires to an AC load panel equipped with circuit breakers.

Step 4: Connecting the DC Cables

DC Connection Precautions

⚠ DANGER

ELECTRICAL SHOCK HAZARD

Connect and disconnect DC wiring only after opening the disconnect switches or breakers at all AC and DC sources.

Failure to follow these instructions will result in death or serious injury.

Recommended Cable Sizes and Lengths and Fuse Size

For recommended DC cables and fuse sizes, see Table 3 and Table 4 on page 17.

Preparing the Cables

To prepare the DC cables:

1. Cut the negative and positive cables to the required length. Strip off enough insulation so you can install the terminals you will be using.

   It is recommended to use crimp connectors. The connector should be designed for a 3/8" stud size to connect to the Freedom SW. If a crimp connector is used, it should be crimped using the tool indicated by the connector manufacturer.

2. Cut the DC ground cable to the required length. Strip off enough insulation so you can install the terminals you will be using.

   It is recommended to use crimp connectors. The connector should be designed for a 1/4" stud size to connect to the Freedom SW. If a crimp connector is used, it should be crimped using the tool indicated by the connector manufacturer.

3. Attach the connectors to the ends of both cables. Make sure no stray wire strands protrude from the connectors.

Guidelines for Routing the DC Cables

Follow these guidelines to ensure maximum performance.

⚠ WARNING

ELECTRICAL SHOCK AND FIRE HAZARD

- Route the cables away from sharp edges that might damage the insulation. Avoid sharp bends in the cable.
- Do not attempt to use the chassis in place of the battery negative connection for grounding. The inverter requires a reliable return path directly to the battery.
- To reduce the chance of radio frequency interference, keep the positive and negative cables close together—ideally, held together by straps, loom, or insulated clamps at regular intervals.
- To ensure maximum performance from the inverter/charger, do not route your DC cables through a DC distribution panel, battery isolator, or other device that will cause additional voltage drops. The exception is the DC fuse and Disconnect or the DC circuit breaker which is required at the battery to protect the DC wiring.
- To help avoid damage caused by reverse polarity battery connection, it is a good idea to mark each end of each cable to identify it as a positive (red) or negative (black) cable before routing the wiring.

Failure to follow these instructions can result in minor or moderate injury

Connecting the DC Cables to the Inverter/Charger

⚠ WARNING

FIRE HAZARD

Use only appropriately sized copper cable. Loose connections, improper connections, and under-rated cables will overheat. Make sure that the supplied bolts on the inverter/charger are tightened to a torque of 11–12 ft-lbs or 132–144 inch-lbs or 14.9–16.3 Nm. Torque all other connections to the manufacturer's specifications. Make sure the DC cable, washers, and bolt are assembled in the order shown in Figure 8.

Failure to follow these instructions can result in death or serious injury.

NOTICE

EQUIPMENT DAMAGE DUE TO REVERSE POLARITY

Before making the final DC connection or closing the DC breaker or disconnect, check cable polarity at both the battery and the inverter/charger. Positive (+) must be connected to positive (+). Negative (–) must be connected to negative (–).

Failure to follow these instructions can damage the unit and/or damage other equipment.

To connect the DC cables:

1. Route the DC cables from the battery bank to the inverter/charger. Observe the "Guidelines for Routing the DC Cables" on page 34.
2. Install a DC fuse and disconnect switch or a DC circuit breaker between the inverter/charger and the battery. It must be installed in the positive side of the DC circuit, as close as possible to the battery.

   This protects your battery and wiring in case of accidental shorting. See Table 4 on page 17 for required fuse or breaker size.
3. Open the DC disconnect switch or turn off the DC circuit breaker.
4. Connect one connector on the POSITIVE (+) cable to the POSITIVE DC terminal on the inverter/charger, as shown in Figure 8. The connector goes on first, then the flat washer (steel), lock washer (steel), and 3/8" bolt (brass).
5. Connect the other connector to the POSITIVE (+) terminal on the fuse or breaker. Observe polarity carefully while completing the installation.

Use a wrench to tighten the bolt to a torque of 11–12 ft-lbs or 132–144 inch-lbs or 14.9–16.3 Nm at the inverter/charger end. Observe the fuse holder or breaker manufacturer's recommendation at the other end.

6. Connect one connector on the NEGATIVE (–) cable to the NEGATIVE (–) DC terminal on the inverter/charger, as shown in Figure 8. The connector goes on first, then the flat washer (steel), lock washer (steel), and 3/8" bolt (brass).

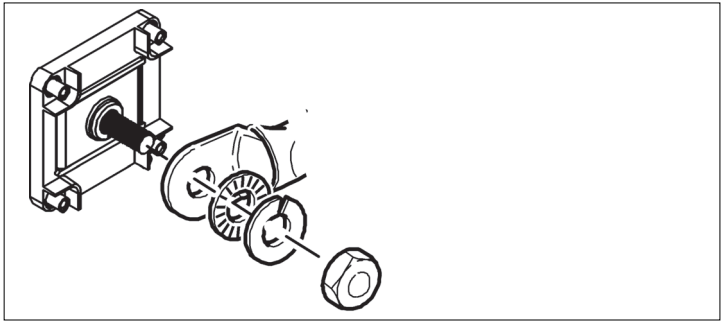

Figure 8 DC Cable Connections

7. Before proceeding, check that the cable polarity is correct: POSITIVE (+) on the inverter/charger is connected to the POSITIVE (+) on the battery, and NEGATIVE (–) cable is connected to the NEGATIVE (–) terminal on the inverter/charger.

IMPORTANT: The next step is the last cable connection you need to make. A spark is normal when the DC disconnect switch is turned on or the DC circuit breaker is closed so be sure step #3 is done before proceeding.

8. Connect the other end of the cable to the NEGATIVE (–) terminal on the battery.

   Use a wrench to tighten the bolt to a torque of 11–12 ft-lbs or 132–144 inch-lbs or 14.9–16.3 Nm at the inverter/charger end.

9. To protect the DC terminals, attach the DC terminal covers (Figure 9) to the inverter/charger, using the screws provided.

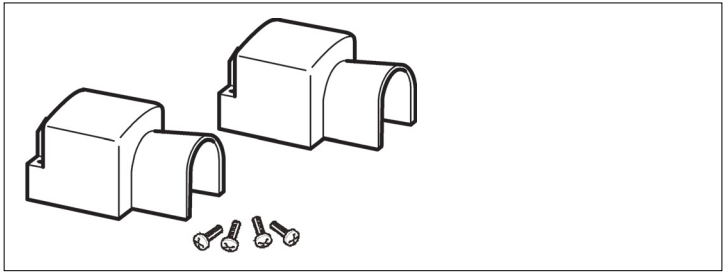

Figure 9 DC Terminal Covers

DC Grounding

The Chassis Ground point on the inverter/charger is used to connect the chassis of the inverter/charger to your system's DC grounding point, as required by regulations for some installations. Use copper wire that is either bare or provided with green insulation.

The grounding guideline given below assumes you are using the code-compliant DC supply cable and fuse sizes indicated on page 16. If you are using different sizes, refer to the applicable code for DC grounding detail.

To connect the chassis ground:

1. Using the appropriate wrench, loosen the nut on the bolt of the chassis ground point shown in Figure 10.
2. Connect the grounding cable between the chassis ground point and the DC grounding point for your system.

   In an RV or vehicle installation, the DC grounding point will usually be the vehicle chassis or a dedicated chassis ground bus.
   For marine installations, refer to the applicable local code for marine DC grounding detail.
3. Tighten the nut to a torque of 1.0–1.25 ft-lbs (1.47–1.7 Nm).

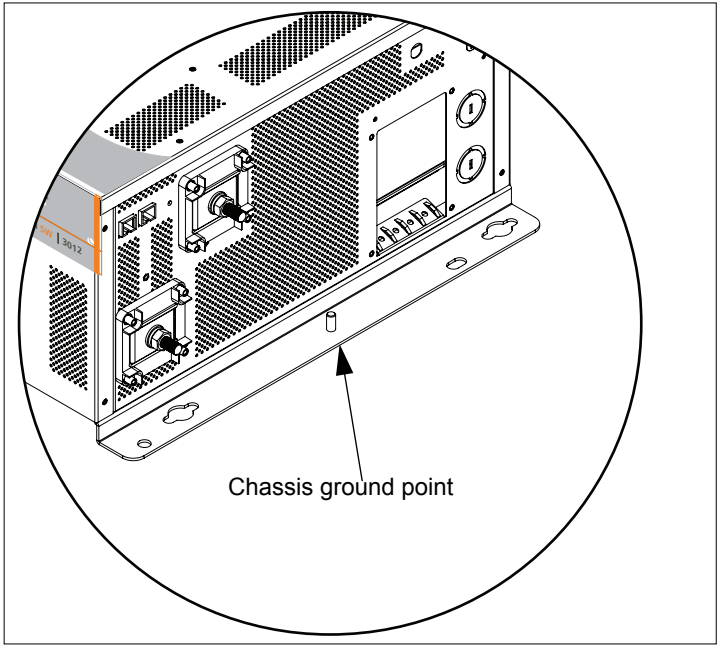

Figure 10 DC Wiring and DC Grounding

Step 5: Connecting the Battery Temperature Sensor (BTS)

Installing a battery temperature sensor (BTS) extends the life of a battery by preventing overcharging in warm temperatures and undercharging in cold temperatures. With a BTS monitoring the battery temperature, the voltage delivered to the battery is adjusted according to the battery's actual temperature.

The BTS has a self-adhesive backing and attaches to the side of the battery. A 25-foot (7.6 m) cable is supplied with the BTS.

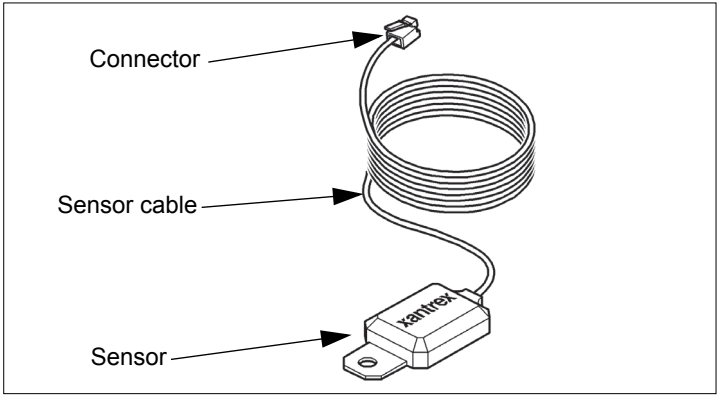

Figure 11 BTS with Cable

Mounting Options

You can mount the BTS in one of two ways:

- Mounting the sensor to the negative battery post allows the internal battery temperature to be sensed and provides the most accurate results.
- Attaching the sensor to the side of the battery using the self-adhesive backing also provides good results in most situations.

NOTICE

EQUIPMENT DAMAGE

Use only the Freedom SW-compatible Battery Temperature Sensor (BTS). To order a spare BTS, call customer service and order part number 809-0946.

Failure to follow these instructions may damage equipment.

Mounting to the Negative Battery Terminal

To mount the sensor on the negative battery terminal:

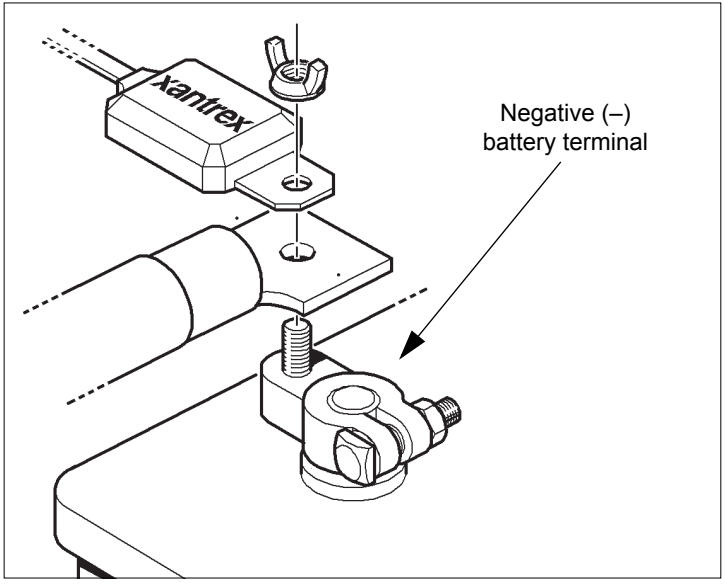

Figure 12 BTS Mounted on the Negative Battery Terminal

1. Select the battery to be monitored. The BTS should be connected to the battery bank that is directly connected to the inverter/charger.
2. Switch off all devices operating from the battery, or open the battery switch (if present) to disconnect the battery.
3. Wait 10 minutes for any explosive battery gases to dissipate.
4. Remove the nut that connects existing wiring ring terminals to the battery negative terminal stud.
5. Move or reorient the existing wiring ring terminals on the battery negative terminal stud, so there is a flat surface on which to seat the BTS mounting plate.

   You may need to bend the ring terminal crimp and/or wires slightly downward to allow the sensor to seat flush to the top surface of the upper ring terminal.
6. Mount the sensor directly on top of the ring terminal, as shown in Figure 12, and firmly tighten the terminal nut.

⚠ WARNING

FIRE HAZARD

Install the DC wire on the battery terminal, then install the sensor on top of the DC wire. This sequence is required to provide the best connection to the battery and to ensure correct performance of the sensor.

Failure to follow these instructions can result in death or serious injury.

7. Check to ensure that the sensor and all wires are held firmly and cannot be moved.
8. Turn the battery switch on again (if you opened it in Step 2.)
9. Route the sensor cable to the inverter/charger and plug it into the blue BTS port, as shown in Figure 13. Secure the cable along its length.

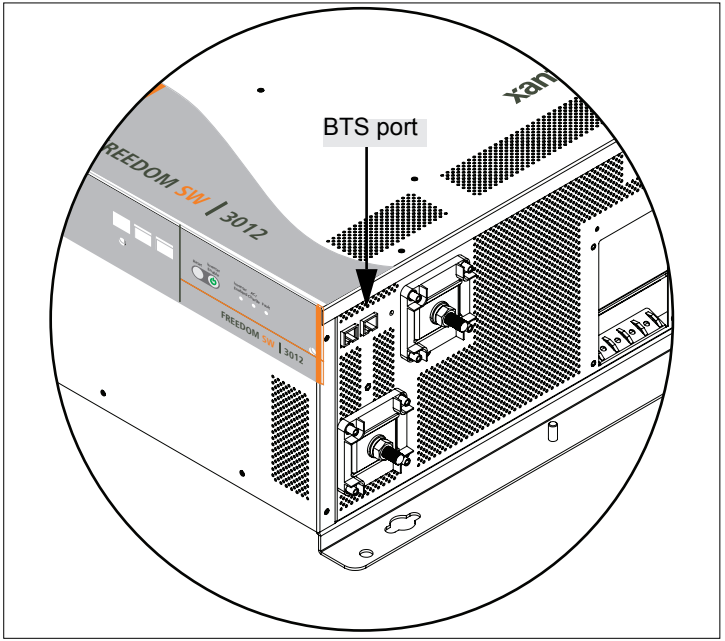

Figure 13 Connecting the BTS Cable to BTS Port

Mounting to the Side of the Battery Case

To mount the sensor on the battery case:

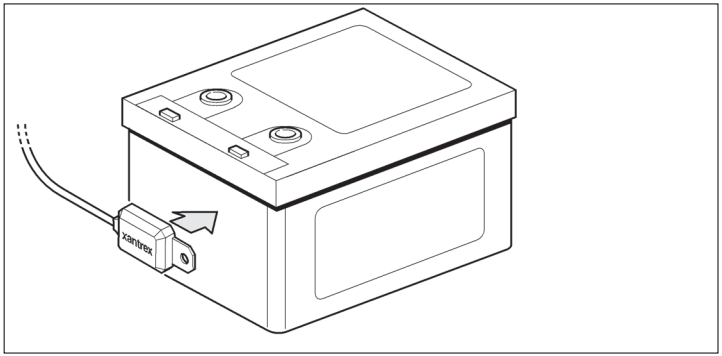

Figure 14 BTS Mounted on the Battery Case

1. Select the battery to be monitored.

   The BTS should be connected to the battery bank that is directly connected to the inverter/charger.

2. Select a side suitable for attaching the sensor.

   The surface where the sensor is to be mounted must be flat and free from reinforcing ribs or other raised features. This surface must be in direct internal contact with the battery electrolyte. Do not install the sensor near the top of the battery or on the battery's top surface.

3. Clean the selected area thoroughly to remove any oil or grease that could prevent the sensor from adhering to the battery case. Allow the battery case to dry thoroughly.
4. Peel the protective backing from the self-adhesive strip on the rear of the sensor.
5. Press the sensor firmly against the clean side of the battery to fix it in place, as shown in Figure 14.
6. Route the sensor cable to the inverter/charger and plug it into the Battery Temp. jack, as shown in Figure 13. Secure the cable along its length.

Step 6: Connecting to the Network

For your reference, Figure 15 shows where the network connections are made on the Freedom SW.

To connect the Freedom SW to the Xanbus network:

- Plug a network cable connected to the Xanbus network into either one of the two Xanbus Interface network ports on the Freedom SW.

NOTICE
EQUIPMENT DAMAGE Connect the Freedom SW only to other Xanbus compatible devices. Although the cabling and connectors used in this network system are the same as Ethernet connectors, **this network is not an Ethernet system**. Equipment damage may result from attempting to connect two different systems. Do not attach the Freedom SW On/Off switch to these ports. **Failure to follow these instructions can damage the unit and/or damage other equipment.**

Detailed information on planning and installing your network is available in the *Xanbus System Installation Guide.* Refer to this guide to determine the type of network layout to install, as well as guidelines for installing the network.

The Xanbus System Installation Guide is available for download at **www. xantrex.com**

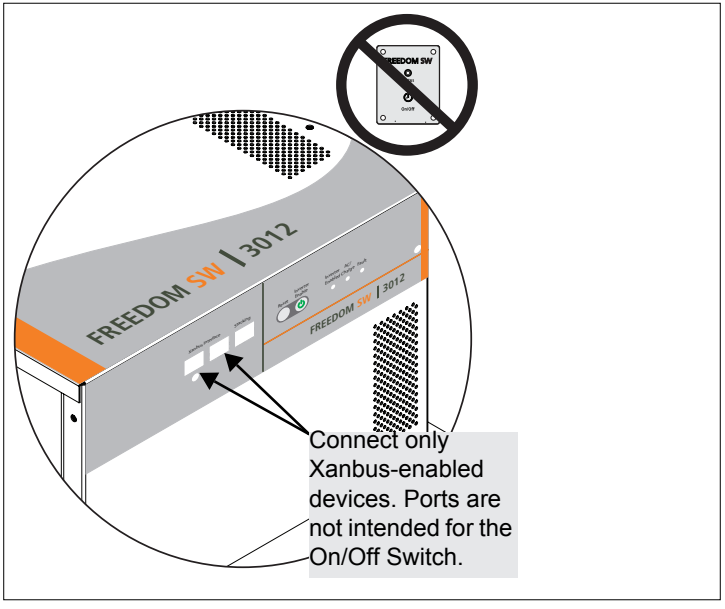

Figure 15 Connecting to a Xanbus Network Port

Step 7: Performing Checks Prior to Initial Start-Up

Before testing your installation, ensure these conditions are met:

- ❒ Chassis and AC grounds are properly installed.
- ❒ AC input connections and AC output connections are wired correctly on the terminal block and not reversed.
- ❒ Positive (+) battery cable is connected to the positive (+) battery terminal through the DC fuse and disconnect switch or DC circuit breaker.
- ❒ Negative (–) battery cable is connected to the negative (–) battery terminal.
- ❒ Battery voltage is within the proper range for this unit:
  10–16 volts DC for 12-volt models,
  20–32 volts DC for 24-volt models.
- ❒ DC disconnect switch or breaker is turned off.
- ❒ AC input and output breakers are turned off.
- ❒ All connections are tight.

Step 8: Testing Your Installation

⚠ WARNING

ELECTRICAL SHOCK HAZARD

Do not use the **INVERTER ENABLE** button on the Freedom SW to de-energize the unit. This button and buttons on optional accessories, such as the SCP, do not disconnect DC or AC power sources to the Freedom SW.

Failure to follow these instructions can result in death or serious injury.

There are several tests to be performed for testing your installation. These tests will verify that:

- the Freedom SW works in invert mode
- the Freedom SW works in charge mode
- the Freedom SW works in AC bypass mode

If the test fails at any point, go to “Step 7: Performing Checks Prior to Initial Start-Up” on page 44 and go through the checklist again to check the installation. Then perform the test again. If the test fails again, see the troubleshooting section in the Freedom SW 3000 Sine Wave Inverter/Charger Owner’s Guide.

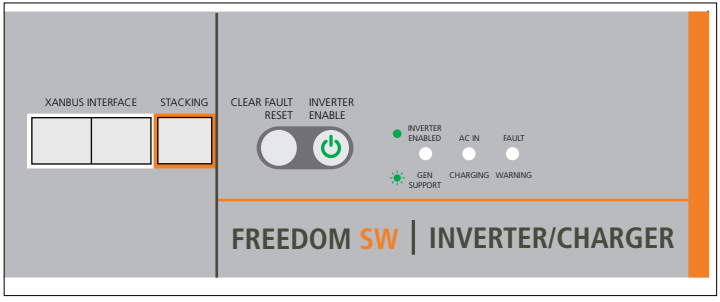

Figure 16 Freedom SW Front Panel

Testing in Invert Mode

To test the Freedom SW in invert mode, using a 100 watt light bulb as the test load:

1. Close the DC disconnect switch or the DC circuit breaker to supply DC power to the Freedom SW.

   Wait for all the lights on the front panel to flash on and off, indicating that the unit has successfully initialized (10 to 30 seconds).

   If the bulb does not come on, make sure the voltage at the DC terminals on the Freedom SW is correct, as described in “Step 7: Performing Checks Prior to Initial Start-Up” on page 44.

2. After initialization, observe that none of the lights on the front panel should remain illuminated.
3. Press the **INVERTER ENABLE** button.
   Verify that the **INVERTER ENABLED** LED is on.
4. Connect the Freedom SW to the test load by closing the AC breaker that controls the circuit that the test load is connected to. If the light bulb illuminates, the Invert mode is working.
5. Press the **INVERTER ENABLE** button to disable the inverter.
   Verify that the **INVERTER ENABLED** LED is off.

Testing in Charge Mode and AC Bypass Mode

1. Close the AC supply breaker to supply AC power to the unit.

To verify that the Freedom SW starts charging:

2. After a few seconds, verify that the **AC IN/CHARGING** LED on the front panel is turned on (indicating that the batteries are being charged).

To verify that Freedom SW correctly switches to Bypass mode:

3. Disable the AC source and disable inverter mode by pressing the **INVERTER ENABLE** button.
4. Connect the test load to the AC output connection of the unit.
5. Enable the AC source and the test load should turn on after ten seconds.

Installation Complete

Your installation is now complete. The Freedom SW inverter/charger is ready for use.

The preceding tests use a light test load (a light bulb) as a test case. If you encounter problems when using a load over 1000 watts (for example, a hair dryer or microwave), see the troubleshooting information in the Freedom SW 3000 Sine Wave Inverter/Charger Owner's Guide.

Stacking Features

The Freedom SW inverter/chargers can support two stacking configurations. This gives the system engineer and/or installer more options to work with when tailoring a system to meet load demands. Multiple inverter/chargers of different power levels can be installed in a system as stand alone, parallel stacked, or series stacked.

In parallel stacking mode, only two Freedom SW inverter/chargers of the same model can be parallel-stacked. For example, two Freedom SW 2012s can be stacked in parallel as both units each have a 12-volt rating and a power rating of up to 2000 watts. For now, a Freedom SW 2012 which is 12-volt rated cannot be parallel-stacked with a Freedom SW 2024 which is 24-volt rated. See “Parallel Stacking” on page 48.

In series stacking mode, you may stack two different Freedom SW inverter/chargers of different power ratings but same voltage ratings. For example, a Freedom SW 2012 can be series-stacked with a Freedom SW 3012. However, a Freedom SW 2012 which is 12-volt rated cannot be series-stacked with a Freedom SW 2024 which is 24-volt rated. See “Series Stacking” on page 49.

NOTICE

DAMAGE TO INVERTER/CHARGER

Do not connect any wires to the **AC INPUT L2** terminals on both units at all when stacking two Dual Input Line/Dual Output Line (DI-DO) models such as two Freedom SW 3012 units. The same applies to the **AC OUTPUT L2** terminals on both units. Any damage sustained by non-compliance may damage the inverter/chargers and void the warranty. The only exception is **AC OUTPUT N2**. See “Parallel Stacking” on page 48.

Failure to follow these instructions can damage the unit and/or damage other equipment.

Parallel Stacking

A parallel stacking configuration allows the inverter and charger capacity of a system to be doubled. Parallel-stacked inverter/chargers can operate from different battery banks, meaning each unit is connected to its own battery bank. However, it is highly recommended to only use a single battery bank. See “DC Connections for Stacked Inverters” on page 52.

AC INPUT L2 terminals on both units must not be connected at all as they are not monitored lines.

IMPORTANT: Freedom SW models with dual AC lines do not monitor voltage and current on **AC INPUT L2** and **AC OUTPUT L2**. If any **L2** line is connected, any current flowing in this branch will not be displayed.

AC OUTPUT L1 and **AC OUTPUT L2** must not be connected together. However, the two output neutrals (**AC OUTPUT N1** and **AC OUTPUT N2**) can be tied together for redundancy. This reduces stress on the neutral path internal to the unit since two circuits will carry the load current.

NOTE: Do NOT connect a stacking cable to the **STACKING** port on the front panel of a Freedom SW to configure two units for parallel stacking.

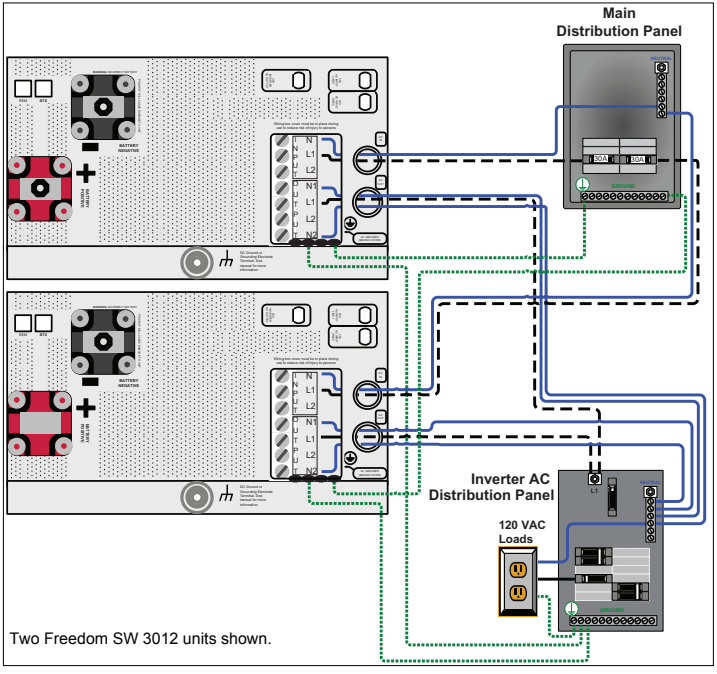

Figure 17 Parallel Stacking Using Two Freedom SW 3012s

Series Stacking

A series stacking configuration allows two inverters to be configured to produce 120 and 240 volts AC, also known as, a single-phase three-wire configuration. Freedom SW models with the same DC voltage rating can also be assembled in a system. For example, a Freedom SW 3012 can be installed on **L1** while a Freedom SW 2012 operates on **L2**. However, it is important to remember that for Freedom SW inverter/chargers that support dual line AC configuration (DI-DO), only **AC INPUT L1** terminal should be used and that the **AC INPUT L2** terminal must have no connections at all. If **L2** is connected to any incoming or outgoing AC line, the inverter/charger may suffer internal damage not covered by warranty.

NOTICE

GENERAL PRECAUTIONS

- Install stacked inverter/chargers in close proximity to each other.
- Connect AC neutrals together close to the inverters. Keep input and output neutrals isolated.
- Connect the inverter's battery negative terminals together according to instructions in "Step 4: Connecting the DC Cables" on page 33.
- Make all AC and DC connections and verify that they are made according to this guide. Make sure that all connections are tight (especially the DC side). Connect the stacking cable to each inverter's stacking port.
- Each inverter must be enabled and turned on individually before AC power becomes available.

Failure to follow these instructions can damage the unit and/or damage other equipment.

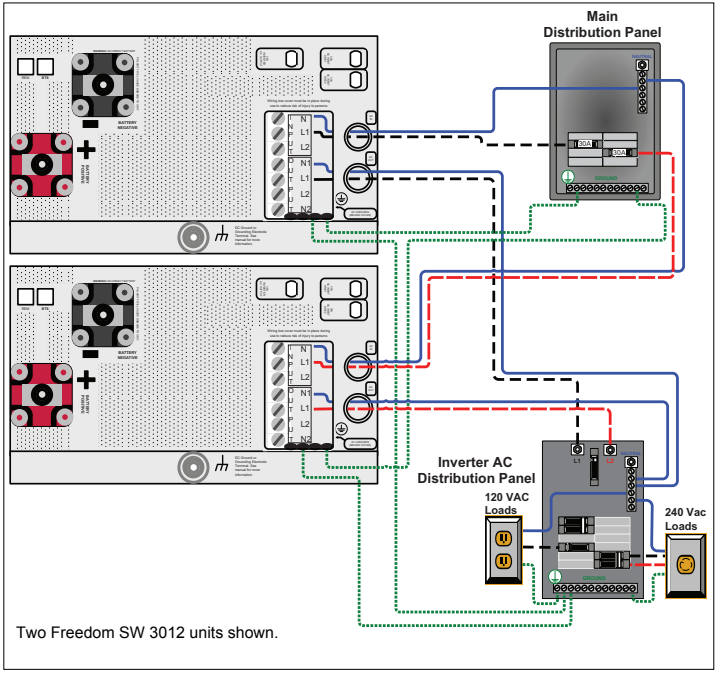

Figure 18 Series Stacking Using Two Freedom SW 3012s

Stacking Cable

For series stacking (120 and 240 volts), connect the Xantrex stacking cable between the two **STACKING** ports.

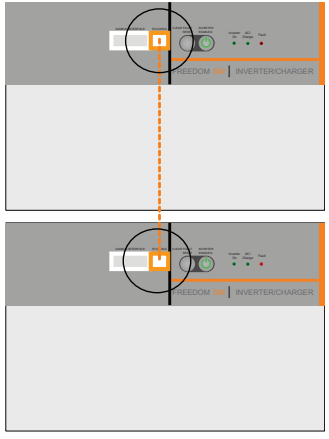

Two Freedom SW 3012 units shown.

Figure 19 Stacking Cable for Series Stacking

To order the stacking cable, call customer service and order part number 808-9005.

Series Stacking Operation

The inverter is designed to accept power input from a single-phase, three-wire 120/240-volt AC system with 120 volts to each inverter. The input line (**INPUT L** or **L1**) terminal of each inverter accepts one leg of 120 volts each and the input neutral (**INPUT N**) terminals of both inverters are tied together and connected to the power source neutral leg.

Any AC load being powered while AC input is present to the inverters will be in addition to the power being drawn for charging the batteries. Each unit in the stack can provide a full pass-through current of 30 amps for 120-volt systems.

When AC input power is lost, both units in the stack switch from charger to inverter mode. Once this switch is made, 120 volts AC is available from each individual inverter or 240 volts AC is available across the output line (**OUTPUT L** or **L1**) terminals of the stacked pair.

Stacked inverters will typically support about twice the surge power of one standalone unit. For example, a Freedom SW 3012 stacked pair will surge about 12000 watts.

DC Connections for Stacked Inverters

Use individual overcurrent devices between the battery positive and each inverter. Keep cable lengths to the two inverter/chargers the same in order to balance cable losses. If not, the battery cable difference in length between the two inverter/chargers should not exceed 12 inches (30.48 cm).

Connect the stacked system as follows:

1. Connect each negative terminal to the battery.
2. Connect a Grounding wire to the common negative.
3. Connect each positive terminal of the inverter to the battery through a DC disconnect in each positive line. Do not tie the positives together between inverters.
4. Connect the Ground bonding wire from each inverter to the same location on the vehicle chassis. Use that same length and gauge wire for both inverter/chargers.
5. Connect the battery temperature sensors (BTS), if needed.

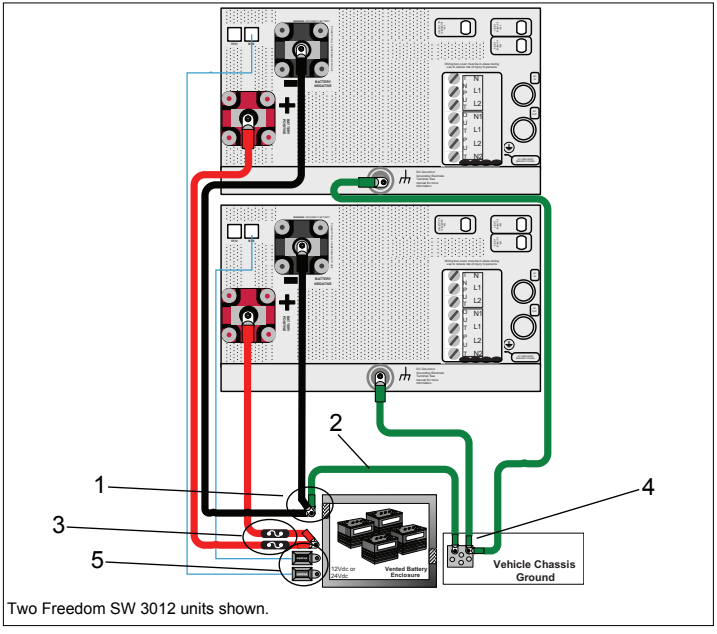

Figure 20 Connecting Battery Cables and DC Ground Wires

Neutral Wiring for Stacked Inverters

Due to the neutral ground switching design of the Freedom SW Inverter/charger, it is mandatory that the **AC INPUT** and **AC OUTPUT N**eutrals be isolated from one another. In a stacked pair configuration, connect the two AC input neutrals together at the main distribution panel and the two AC output neutrals at an isolated neutral location in the inverter AC distribution panel.

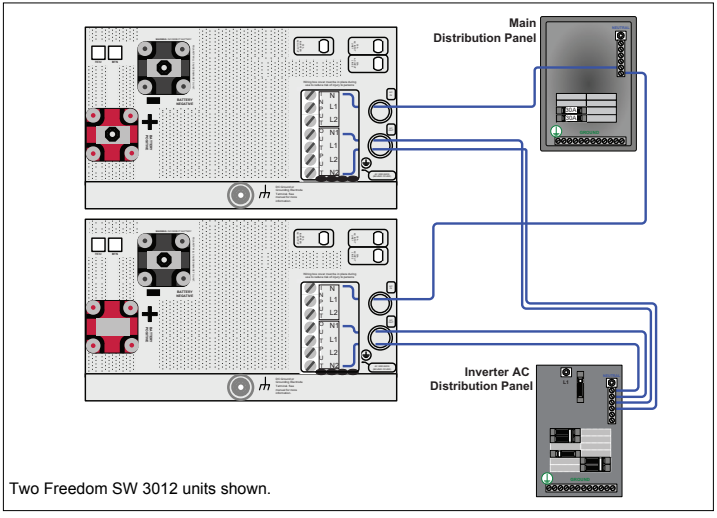

Figure 21 Neutral Wiring for Stacking

Configuring System for Stacked Operation

Verify all DC and AC connections. Check Xanbus network connections and ensure that terminators are installed at devices at each end of the network. The simplest system includes a Xanbus SCP, the two Freedom SW inverter/chargers to be stacked and two Xanbus terminators.

For both units to operate in stacked configurations, a Master and Slave have to be assigned. The default out-of-box configuration for all Freedom SW inverter/chargers is **Master** which causes a conflict the first time the system is powered up. The installer will need to change configuration on one of the inverter/chargers to **Slave** mode.

To configure the system for stacking:

1. Apply DC power to both inverter/chargers.
   Power up order has no impact. Because there are now two Master units in the system, the SCP will display an **F71** fault, a “system configuration fault”.
2. From the SCP **System Status** screen, press **Enter**. The **Select Device** screen appears.
3. Select the inverter to configure as a Slave unit from the list, then press **Enter**.
4. Bring up the **Advanced Settings** screen by pressing **Enter**, Up, and Down arrow buttons all together.
5. Select **Advanced Settings** and press **Enter**. The Advanced Settings screen appears.
6. Scroll down to select **Stacking**.
   At this point all devices in the system will be automatically placed in standby mode. All three LEDs on the inverter to be configured will start flashing.

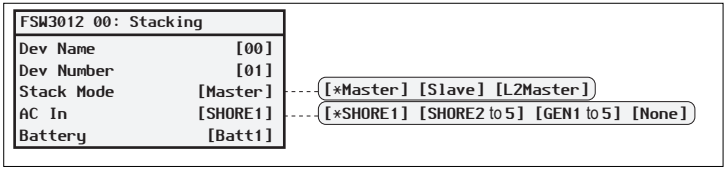

Figure 22 Stacking Menu Screen

7. Select **Stack Mode** and press **Enter**.
8. For Parallel Stacking: Select **Slave** and press **Enter**.

   For Series Stacking: Select **L2Master** and press **Enter**.
9. Press the **Func** button repeatedly until the **System Status** screen appears.

NOTES:

The only situation in which the Slave inverter may shut down the Master inverter is when fault conditions are detected such as high or low battery voltage, overcurrent, or over-temperature conditions. Both inverters will auto reset after a fault condition has been cleared. The exception is that an overcurrent condition will generate a shutdown for both inverters that will require a manual restart of the system.

Search Mode in Series Stacking

When configured for 120/240-volt series stacking, each inverter/charger operates independently in search mode and attempts to detect loads connected to its terminals only.

Search Mode Operation in Parallel Stacking

When two inverter/chargers are stacked for parallel operation, search mode behavior on the Slave unit is modified and is dependent on how much total load is on the system.

Disabling Search Mode on the Master Unit

In parallel stacking, search mode on the Master unit will not function properly. When the Master sends out a load search pulse, a small current also flows into the output of the Slave unit since the two outputs are in parallel. This Master unit falsely detects a load causing erratic search mode operation. For this reason, it is highly recommended to disable search mode on the Master unit in a parallel stacking system.

Setting Search Mode on the Slave Unit

The Slave unit will behave in one of two ways depending on whether its search mode is enabled or disabled.

Search mode enabled This is the recommended mode for parallel stacking and it helps minimize battery draw. The Slave unit continuously monitors the output of the Master unit. If the Master unit has more than 60% of the rated load (e.g., 1800 watts on Freedom SW 3012), the Slave unit will assist the Master and the two will share the load equally. Should the load on the Master drop below 20% of rated load (600 watts for Freedom SW 3012), the Slave unit disengages and returns to a waiting state.

Search mode disabled The Slave unit operates continuously along with the Master unit and shares the load.

Wiring Schematic

NOTE: Please refer to the Stacking Configuration sheet that shows the wiring schematic employed between two Freedom SW inverter/chargers that are stacked in parallel and in series.

IMPORTANT: Follow the same guidelines in “Installing the Inverter/Charger” on page 21 when choosing cables and/or wires for AC and DC connections.

⚠ DANGER

FIRE, ELECTRICAL SHOCK, AND ENERGY HAZARDS

Make sure all wiring being used to make stacking configurations between inverter/chargers is disconnected (physically or by opening the breaker) from all electrical sources before handling. All wiring must be done in accordance with local and national electrical wiring codes.

Failure to follow these instructions will result in death or serious injury.

Charger Settings in Stacked Configuration

The Freedom SW 3012 includes a maximum 150A charger. When using two stacked Freedom SW 3012 inverter/chargers connected to the **same battery bank,** a total of 300A (150A **x** 2) of bulk charging is possible into that single common battery bank. For small battery banks and/or certain battery types this bulk mode current may be too high, therefore Freedom SW models include a battery bank capacity **(`Batt Capacity`)** setting and a maximum charge rate (%) (**`Max Chg Rate`**) setting.

The battery bank capacity (**`C`**) is the bank's total Amp-hour capacity, which is best determined by a qualified RV electrical technician.

The **`Max Chg Rate`** depends on the battery manufacturer's maximum charge rate for the specific battery model being used to construct the bank. This total bank maximum charge rate is best determined by a qualified RV electrical technician. Suitable battery types include Flooded, GEL and AGM.

⚠ DANGER

EXPLOSION HAZARD

Do not mix different battery types within the same battery bank.

Failure to follow these instructions will result in death or serious injury.

For a Flooded type battery bank, the *preferred* charge rate (in Amps) is usually 10-15% of **`C`** where **`C`** = battery bank's total Amp-hour capacity. However, the industry-accepted *maximum* charge rate is 25% of **`C`**. Some AGM or Gel battery models may have a *maximum* charge rate as high as 50% of **`C`** and in rare cases, up to 100% of **`C`**.

NOTICE

RISK OF SHORTENED BATTERY LIFE

Do not exceed the battery manufacturer's recommended maximum charge specifications because the resulting battery temperature rise shortens battery life.

Failure to follow these instructions can damage the unit and/or damage other equipment.

Calculations

Once installed and configured, each Freedom SW charger in the dual configuration should be set to its own bulk charge current limit as follows:

Industry accepted *maximum* charge rate (%)
x battery bank's total Amp-hour capacity (**C**)
x $^1/_2$ (for one of the chargers)
= *Maximum* charger #1 **output current** (in Amps) allowed in bulk mode (also limited to the charger's maximum capacity)

To calculate the system total bulk output for the stacked pair,

Charger #1 **output current** (in Amps)
+ Charger #2 Actual **output current** (in Amps)
= System Total BULK **output current** (in Amps)

The System Total BULK **output current** flows into the battery bank. As such, this total bulk current is split/distributed within the bank through each individual parallel and/or series connected battery. Therefore, the current each battery "sees" **must not exceed each individual battery's maximum allowed charge current** as specified by the battery manufacturer. Since most battery banks are comprised of the same battery type, model and length of interconnecting cables, current sharing is roughly equal through each parallel branch of batteries. Therefore, the above generalizations of *maximum* charge rate (%) can be made for the entire battery bank.

The Freedom SW's **`Max Chg Rate`** (%) setting defaults to **`100`** (adjustable from **`0`** to **`100`**). So if the Freedom SW 3012 charger with a maximum possible 150A charger capacity is set to a **`Max Chg Rate`** of **`100`** (%) then its full 150A of current can be delivered into the battery bank. However, if this is too high, the installer/operator may reduce the **`Max Chg Rate`** setting to suit the system battery type and bank requirements (and limitations), to avoid overheating the battery bank.

NOTICE

RISK OF SHORTENED BATTERY LIFE

Configure the charger to ensure that it does not exceed the battery manufacturer's recommended maximum charge specifications to prolong battery life and to exhibit best performance.

Failure to follow these instructions can damage the unit and/or damage other equipment.

Examples

Example 1: System composed of two stacked Freedom SW 2012s. Each Freedom SW 2012 has a maximum charge capacity of 100A.

The industry's commonly accepted practice suggests a typical Flooded battery bank capacity (**C**) of 400Ah should not be charged beyond 25% of its capacity (100A). Therefore, when configuring the two stacked Freedom SW chargers, each charger may have a *maximum* allowable charger output current of 50A (400 **x** 25% **x** $^1/_2$) into the common battery bank as described in the Calculations section. Also, the System Total BULK **output current** is calculated as 100A (50A + 50A).

To set the `Max Chg Rate` (%) setting in each Freedom SW 2012:

1. Divide the *maximum* allowable charger output current of 50A by the Freedom SW 2012's maximum charge capacity of 100A.

   So, 50 **/** 100, gets an approximate value of 0.5 (or 50%).
2. Set the **`Max Chg Rate (%)`** setting to **`50`** which means 50%.

In this example, the **actual** output current is limited to 50% of 100A which is 50A. Therefore, the **actual** System Total BULK **output current** comes out to about 100A.

Example 2: System composed of two stacked Freedom SW 3012s. Each Freedom SW 3012 has a maximum charge capacity of 150A. The two stacked Freedom SW 3012 inverter/chargers connected to the **same battery bank** can possibly produce a total of 300A.

The industry's commonly accepted practice suggests a typical Flooded battery bank capacity (**C**) of 400Ah should not be charged beyond 25% of its capacity (100A). Therefore, when configuring the two stacked Freedom SW chargers, each charger may have a *maximum* allowable charger output current of 50A (400 **x** 25% **x** $^1/_2$) into the common battery bank as described in the Calculations section. Also, the System Total BULK **output current** is calculated as 100A (50A + 50A).

To set the `Max Chg Rate` (%) setting in each Freedom SW 3012:

1. Divide the *maximum* allowable charger output current of 50A by the Freedom SW 3012's maximum charge capacity of 150A.

   So, 50 **/** 150, gets an approximate value of 0.33 (or 33%) which can be roughly reduced to 30%.
2. Set the **`Max Chg Rate (%)`** setting to **`30`** which means 30%.

In this example, the **actual** output current is limited to 30% of 150A which is 45A. Therefore, the **actual** System Total BULK **output current** comes out just under 90A.

Example 3: System composed of two stacked Freedom SW 2012s. Each Freedom SW 2012 has a maximum charge capacity of 100A. The two stacked Freedom SW 2012 inverter/chargers connected to the **same battery bank** can possibly produce a total of 200A.

The industry's commonly accepted practice suggests a typical Flooded battery bank capacity (**C**) of 1000Ah should not be charged beyond 25% of its capacity (250A). Therefore, when configuring the two stacked Freedom SW chargers, each charger may have a *maximum* charger output current of 125A (that is, 1000 **x** 25% **x** $^1/_2$) into the common battery bank as described in the Calculations section. Also, the System Total BULK **output current** is calculated as 250A (that is, 125A + 125A).

To set the `Max Chg Rate` (%) setting in each Freedom SW 3012:

1. Divide the *maximum* allowable charger output current of 125A by the Freedom SW 2012's maximum charge capacity of 100A.

   So, 125 **/** 100, gets an approximate value of 1.25 (or 125%) which means that even when the charger is operating at 100% full power, the battery bank can more than adequately accept the current the charger is delivering.

2. Set the **`Max Chg Rate (%)`** setting to **`100`** which means 100%. There is no setting beyond 100%.

In this example, the **actual** output current is limited to 100% of 100A which is 100A. Therefore, the **actual** System Total BULK **output current** comes out to 200A.

Example 4: System composed of two stacked Freedom SW 3012s. Each Freedom SW 3012 has a maximum charge capacity of 150A. The two stacked Freedom SW 3012 inverter/chargers connected to the **same battery bank** can possibly produce a total of 300A.

The industry's commonly accepted practice suggests a typical Flooded battery bank capacity (**C**) of 600Ah should not be charged beyond 25% of its capacity (150A). Therefore, when configuring the two stacked Freedom SW chargers, each charger may have a *maximum* charger output current of 75A (that is, 600 **x** 25% **x** $^1/_2$) into the common battery bank as described in the Calculations section. Also, the System Total BULK **output current** is calculated as 150A (that is, 75A + 75A).

To set the `Max Chg Rate` (%) setting in each Freedom SW 3012:

1. Divide the *maximum* allowable charger output current of 75A by the Freedom SW 3012's maximum charge capacity of 150A.

   So, 75 / 150, gets an approximate value of 0.50 (or 50%) which can be set exactly to 50%.

2. Set the **`Max Chg Rate (%)`** setting to **`50`** which means 50%.

In this example, the **actual** output current is limited to 50% of 150A which is 75A. Therefore, the **actual** System Total BULK **output current** comes out to about 150A.

Inverter/Charger Physical Specifications

For complete inverter/charger specifications, refer to the *Freedom SW 3000 Sine Wave Inverter/Charger Owner's Guide*.

The physical specifications of the Freedom SW are described in Table 5 below.

Table 5 Freedom SW Physical Specifications

Length	15.25 inches (387 mm)
Width	13.5 inches (343 mm)
Height	7.75 inches (197 mm)
Weight (2kW)	60.5 lb (27.5 kg)
Weight (3kW)	69.4 lb (31.5 kg)

Battery Bank Sizing

Battery capacity Battery size or capacity is just as important as the battery type selected for use with the Freedom SW. The batteries are the most important part of your system, so it is recommended that you purchase as much battery capacity as possible. A large battery will extend running time and ensure that your inverter/charger delivers full rated surge.

It is recommended a minimum battery size of 200 amp-hours (Ah) for moderate loads (<1000W) and greater than 400 Ah for heavy loads.

See “Estimating Battery Requirements” for information on a more detailed calculation.

About Amp-hours A number of different standards are used to rate battery energy storage capacity. Automotive and marine starting batteries are normally rated in cranking amps. This is not a relevant rating for continuous loads like an inverter. Deep-cycle batteries use a more suitable rating system such as amp-hours (Ah).

Amp-hour capacity is the number of amps a battery can continuously deliver during a specified number of hours. It is represented by the product of the two —amps multiplied by hours.

A typical marine or RV battery rated for 100 Ah can deliver 5 amps for 20 hours (5 amps × 20 hours = 100 Ah). This same battery can deliver a higher or lower current for less or more time, limited approximately by the 100 Ah figure (50 amps for 2 hours or 200 amps for 1/2 hour), but usually the capacity figure given is only accurate for the specified duration (20 hours).

For Freedom SW inverter systems requiring a 24-volt battery bank,

- A pair of 200 Ah@12 volts batteries may be connected in series to create a 24-volt bank of 200 Ah@24 volts capacity,
- While two of these series pair branches may be connected in parallel to create a higher capacity 400 Ah@24 volts battery bank.

Estimating Battery Requirements

Calculating Battery Size

Step 1: Compute Amp-hours

For each appliance, compute the number of amp-hours that will be used between charging cycles, as follows:

1. Obtain the wattage. If the wattage is marked on the nameplate rating, use that. Otherwise, multiply the marked voltage and amperage:
   WATTS = VOLTS × AMPS.
2. Obtain the Watt-hours by multiplying that amount by the hours the appliance will be used:
   WATT-HOURS = WATTS × HOURS.
3. Obtain the amp-hours that the appliance requires by dividing that amount by 10 (the factor for the Freedom SW, which is a 12-volt system):
   BATTERY AMP-HOURS USED = AC WATT-HOURS/10

For example, a 100 W light bulb that is used for 4 hours will use 400 watt-hours (Wh) and the inverter will consume approximately 40 Ah from a 12 volt battery.

4. Enter this information on the blank calculation worksheet (page 68).

Step 2: Calculate Battery Size

5. Complete the rest of the worksheet; see Table 6, “Battery Sizing Example” on page 65 for an example.

Size the batteries at approximately twice the estimated total amp-hour usage. Doubling the expected amp-hour usage ensures that the batteries will not be overly discharged and extends battery life.

Do not skip this doubling step. More capacity is better since you will have more reserve capacity, be better able to handle large loads and surge loads, and your battery won’t be discharged as deeply. Battery life is directly dependent on how deeply the battery is discharged. The deeper the discharge, the shorter the battery life.

Troubleshooting If you find that the system shuts down when appliances with large motors are started, the problem may be that this motor is too much for the battery. Even though you calculated the amp-hour requirements appropriately, the startup of a large motor makes high demands on the battery. You may find that adding more amp-hours (in the form of extra batteries or replacement with a bigger battery) solves the problem.

Table 6 Battery Sizing Example

Appliance	(A) Power Consumption (Watts)	(B) Operating Time per Day (Hours)	Daily watt-hours needed for this appliance (= A × B)
TV & VCR	200 W	2 hours	400 Wh
Small microwave oven	800 W	15 min = 1/4 hour	200 Wh
3 lamps, 60 W each	180 W	4 hours	720 Wh
Coffee maker	600 W	15 min = 1/4 hour	150 Wh
Hair dryer	1500 W	6 min = 1/10 hour	150 Wh
Total daily watt-hours of AC load			1620 Wh
× Number of days between charges			3
= Total watt-hours of AC load between charges			4860 Wh
Battery Ah used between charges (divide by 10 for 12 volt system; divide by 20 for 24 volt system)			486 Ah
Recommended Battery Bank Size in Ah (multiply by 2)			972 Ah

This example illustrates how quickly your battery needs can escalate. To reduce the required battery bank size, you can either conserve energy by eliminating or reducing the use of some loads, or recharge more frequently.

Battery Banks

As your power requirements increase, you may need to use more than one battery to obtain sufficient capacity. Batteries can be connected in parallel, in series, or in series-parallel to create higher capacity systems.

See “Battery Cabling and Hook-up Configurations” on page 69 for more information about battery inter-connection schemes.

Mixing Batteries Batteries connected in parallel should be of the same type and amp-hour rating and from the same manufacturer.

It is not recommended to connect batteries of different types, amp-hour ratings or manufacturers. Improper charging and decreased battery life will result.

⚠ DANGER

EXPLOSION HAZARD

Do not mix different battery types within the same battery bank.

Failure to follow these instructions will result in death or serious injury.

Battery Bank Sizing Worksheet

The following worksheet is a guide to help you determine your battery needs. Be generous in estimating the time for which you will run each of the loads to ensure sufficient battery capacity.

Restrictions on Motor Size

An appliance may require three to six times its normal running current in order to start. The Freedom SW can handle surges to 6000 watts for five seconds, which translates to a locked-rotor-amp rating of no more than 50 amps. The locked rotor amp may be specified on the motor nameplate as “LRA” or “LRI”.

When considering appliances with large motors, follow these guidelines:

- Make sure that the motor’s LRA rating is no more than 50 amps. The Freedom SW may not be able to start a motor with a higher LRA, and the Freedom SW will shut down if the attempt is made.
- Make sure the battery bank, DC cables and DC fuses are capable of handling up to 600 amps DC for five seconds. A weaker circuit may not be able to provide sufficient power to the Freedom SW to allow the Freedom SW to start up the appliance. Again, if the circuit cannot deliver the required current, the system may shut down or the fuse may open.

Table 7 Battery Sizing Worksheet

Appliance	(A) Power Consumption (Watts)	(B) Operating Time per Day (Hours)	Daily watt-hours needed for this appliance (= A × B)
	W	hours	Wh
	W	hours	Wh
	W	hours	Wh
	W	hours	Wh
	W	hours	Wh
	W	hours	Wh
	W	hours	Wh
	W	hours	Wh
Total daily watt-hours of AC load			Wh
× Number of days between charges			
= Total watt-hours of AC load between charges			Wh
Battery Ah used between charges (divide by 10 for 12 volt system; divide by 20 for 24 volt system)			Ah
Recommended Battery Bank Size in Ah (multiply by 2)			**Ah**

Battery Cabling and Hook-up Configurations

Several smaller batteries can be connected to create a battery bank of substantial size. You can connect batteries in three ways: in parallel, series, or series-parallel.

To make a larger battery bank, connect individual batteries with heavy cables. The actual size of the cable depends on whether the batteries are connected in parallel or series. Generally, the cable should not be smaller than the inverter cables—if the main cables are 4/0 AWG, the battery interconnects should be 4/0 AWG.

The best configuration is to connect the batteries in series and parallel. This requires additional cables, but reduces imbalances in the battery bank and can improve the overall performance. Consult your battery supplier for more information regarding the hook-up configuration required for your system.

Battery Parallel Connection

Batteries are connected in parallel when all the positive terminals of a group of batteries are connected and then, separately, all the negative terminals are connected. In a parallel configuration, the battery bank has the same voltage as a single battery, but an Ah rating equal to the sum of the individual batteries. See below.

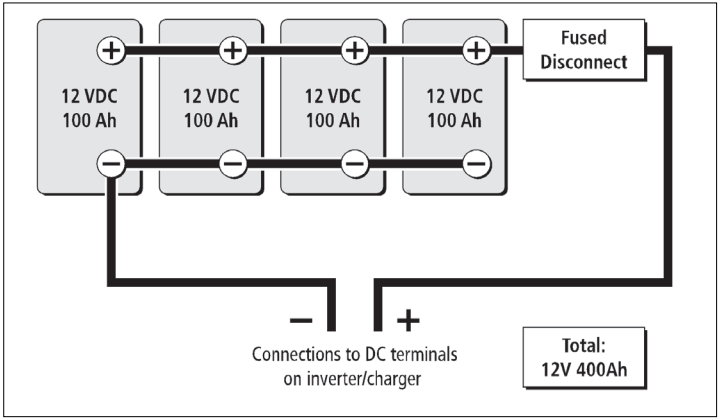

Figure 23 Batteries Connected in Parallel

Battery Series Connection

When batteries are connected with the positive terminal of one battery to the negative terminal of the next battery, they are connected in series. In a series configuration, the battery bank has the same Ah rating of a single battery, but an overall voltage equal to the sum of the individual batteries. See below.

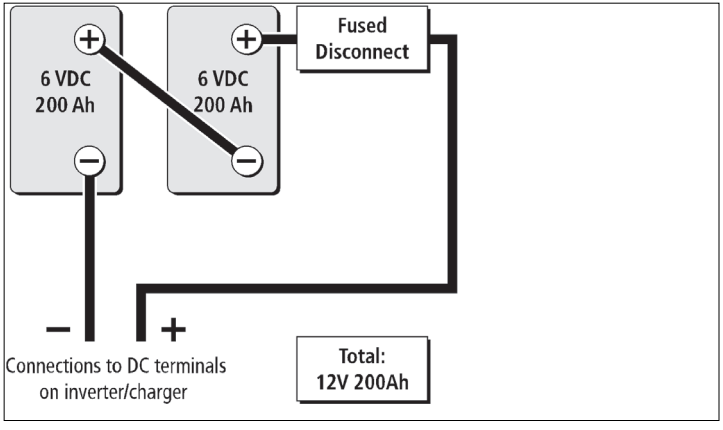

Figure 24 Batteries Connected in Series

Battery Series-Parallel Connections

As the name series-parallel implies, both the series and parallel configurations are used in combination. The result is an increase in both the voltage and the capacity of the total battery bank. This is common with all battery-inverter system voltages. The smaller, lower voltage batteries are first connected in series to obtain the necessary voltage, and then these “batteries connected in series” sets are connected in parallel to increase the battery bank capacity. See below.

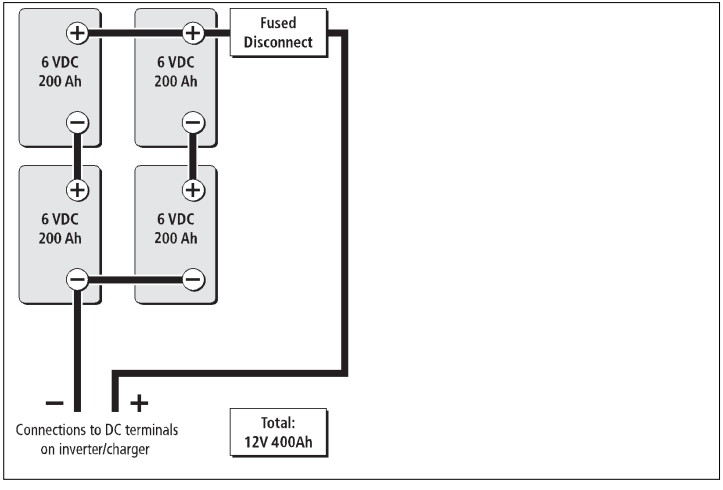

Figure 25 Batteries in Series-Parallel Connections

Specifications

NOTE: Specifications are subject to change without prior notice.

Physical Specifications	Freedom SW 2012	Freedom SW 2024	Freedom SW 3012	Freedom SW 3024
L × W × H	387×343×197 mm (15.25×13.5×7.75 in.)			
Net Weight	27.5 kg (60.5 lbs)		31.5 kg (69.4 lbs)	

Environmental Specifications	Freedom SW 2012	Freedom SW 2024	Freedom SW 3012	Freedom SW 3024
Nominal Ambient temperature	30 °C (86 °F)		40 °C (104 °F)	
Invert mode: • Operating range (full power) • Load @ maximum ambient	 –20 to 30 °C (–4 to 86 °F) 1700W @ 60 °C		 –20 to 40 °C (–4 to 104 °F) 2600W @ 60 °C	
Charge mode: • Operating range (full power) • Current @ maximum ambient	 –4 to 104 °F (–20 to 40 °C) 80 A @ 140 °F (60 °C)	 –4 to 104 °F (–20 to 40 °C) 40 A @ 140 °F (60 °C)	 –4 to 77 °F (–20 to 25 °C) 120 A @ 140 °F (60 °C)	 –4 to 104 °F (–20 to 40 °C) 60 A @ 140 °F (60 °C)
Storage temperature range	–40 to 185 °F (–40 to 85 °C)		–40 to 185 °F (–40 to 85 °C)	
Humidity: Operation/Storage	≤ 95% RH, non-condensing			
Altitude: • Operating • Non-operating	 4,572 m (15,000 feet) 15,240 m (50,000 feet)			
Mounting	deck mount, wall mount with fans and DC/AC sides facing sideward			

This guide for use by qualified personnel only.

NOTE: All inverter specifications are at nominal conditions: 12 (or 24) volts DC inverting 120 volts AC, unless otherwise specified.

Inverter Specifications	Freedom SW 2012	Freedom SW 2024	Freedom SW 3012	Freedom SW 3024
Output wave form	pure sine wave (true sine wave)			
Output power (continuous)	2000 W (up to 30 °C)		3000 W (up to 40 °C)	
Output power (5 seconds)	4000 W		6000 W	
Output current	17 A		24 A	
Peak output current	55 A		80 A	
Output frequency	60 Hz ± 0.2 Hz		60 Hz ± 0.2 Hz	
Output voltage	120 VAC		120 VAC	
AC output connection/s	Single		Split phase in/dual out, Dual in/dual out	
Peak efficiency	90%	94%	90%	94%
No-load current draw (Inverter On)	<3 ADC	<1.5 ADC	<3 ADC	<1.5 ADC
Standby current draw (Inverter Off)	<0.25 ADC	<0.15 ADC	<0.25 ADC	<0.15 ADC
Input DC voltage range	10–16 VDC	20–32 VDC	10–16 VDC	20–32 VDC
Low battery voltage shutdown cut-off	10.5 V (selectable)	21.0 V (selectable)	10.5 V (selectable)	21.0 V (selectable)
High battery voltage shutdown cut-off	16.5 V (selectable)	33.0 V (selectable)	16.5 V (selectable)	33.0 V (selectable)

NOTE: All charging specifications are at nominal conditions: ambient temperature of 77 °F (25 °C), 120 VAC, 60 Hz input, unless otherwise specified.

Charger Specifications	Freedom SW 2012	Freedom SW 2024	Freedom SW 3012	Freedom SW 3024
Charging method	Three-stage charge (Bulk, Absorption, Float) Two-stage charge (Bulk, Absorption) The default charging method is three-stage.			
Without a battery temperature sensor	Three settings with the following temperature values: Cool 50 °F (10 °C) / Warm 77 °F (25 °C) / Hot 104 °F (40 °C) The default setting is Warm and it can only be changed by the factory, a dealer, or a service centre.			
With a battery temperature sensor (included)	The temperature compensation coefficients on a 12-volt battery are as follows: Flooded: 27 mV × (25 °C – BTS °C) Gel: 27 mV × (25 °C – BTS °C) AGM: 21 mV × (25 °C – BTS °C)		The temperature compensation coefficients on a 24-volt battery are as follows: Flooded: 54 mV × (25 °C – BTS °C) Gel: 54 mV × (25 °C – BTS °C) AGM: 42 mV × (25 °C – BTS °C)	
Output current (maximum)	100 ADC	50 ADC	150 ADC	75 ADC
Output voltage	12 VDC	24 VDC	12 VDC	24 VDC
Output voltage range	5–16 VDC	12–32 VDC	5–16 VDC	12–32 VDC
Equalization cycle	Automatic, Manual by Xanbus SCP		Automatic, Manual by Xanbus SCP	
Optimal charging efficiency	> 85%		> 85%	
AC input power factor (at full charge rate)	> 0.98		> 0.95	
AC input current	24A max. (including pass-thru)		24A max. (including pass-thru)	
AC input voltage	120 VAC		120 VAC	
AC input voltage range	85–140 VAC		85–140 VAC	
Dead battery charge voltage	> 5 VDC	> 12 VDC	> 5 VDC	> 12 VDC
Supported AC input types	Single input (up to 30 amps)		Split phase (up to 30 amps per line) Dual input (up to 30 amps per line)	

NOTE: All transfer specifications are at nominal conditions: ambient temperature of 77 °F (25 °C), 120 VAC, 60 Hz input, unless otherwise specified.

Transfer and General Specifications	All Models
Transfer time—utility to invert	< 20 ms
Minimum AC input voltage for transfer	85 VAC
Maximum AC input voltage for transfer	135 VAC
Minimum AC input frequency for transfer	45 Hz
Maximum AC input frequency for transfer	70 Hz
Cooling	Fan-cooled, temperature controlled.

Regulatory Approvals	All Models
Safety	CSA 107.1, UL 458 5th Ed. with marine supplement, ABYC E11 - Alternating Current and Direct Current Electrical Systems on Boats, and ABYC A31 - Battery Chargers and Inverters.
EMC	FCC Part 15, Class B Industry Canada ICES-003, Class B

Inverter Drip Shield Installation

The inverter drip shield helps to protect the unit from dripping or splashing liquids, which will cause a shock hazard. The inverter drip shield is especially useful in marine installations where water from condensation, rain, or sea may come into contact with the Freedom SW.

⚠ WARNING

SHOCK HAZARD

Do not operate the unit under wet conditions and when the unit is wet. This product is intended only for use in dry areas. Installing the inverter drip shield may not entirely protect you from this hazard.

Failure to follow these instructions can result in death or serious injury.

You may purchase the inverter drip shield by contacting an authorized dealer. When ordering, mention part number 808-9004.

To install the drip shield:

1. Acquire ten #6 pan-head steel screws needed to fasten the inverter drip shield to the wall.
2. Locate an appropriate setting for the drip shield above the Freedom SW making sure you cover the entire width of the unit.
3. Fasten the screws through the holes in the drip shield into the wall.

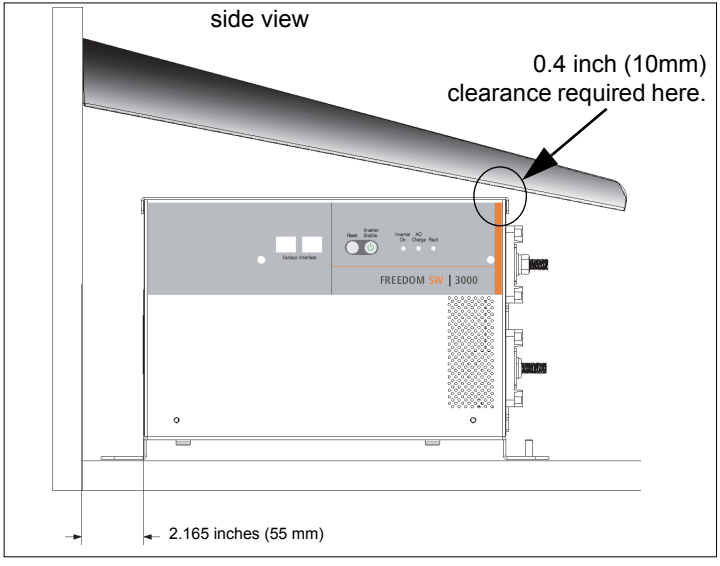

Figure 1 Drip Shield Placement (Desktop Mount)

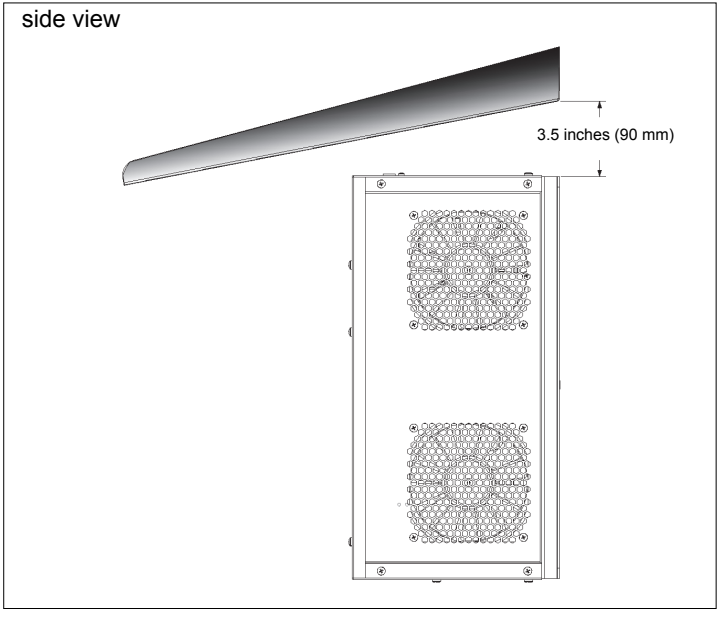

Figure 2 Drip Shield Placement (Inverter Front Panel Facing Up)

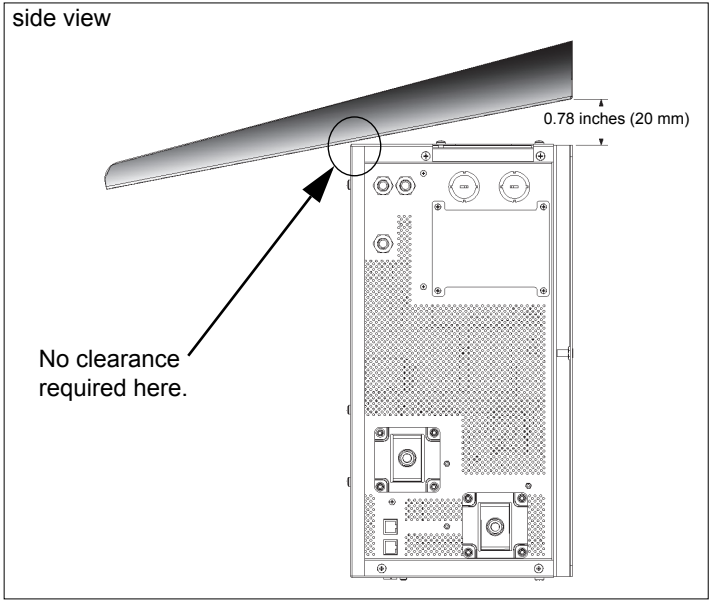

Figure 3 Drip Shield Placement (Inverter Front Panel Facing Down)

Schneider Electric Solar Inverters USA Inc.

+1 800 670 0707
+1 408 987 6030
www.xantrex.com

97-0020-01-01

Printed in China

Freedom SW Inverter/Charger Parallel Stacking Configuration

120 VAC only

CAUTION

DO NOT USE **INPUT L2** AND **OUTPUT L2** IN STACKING CONFIGURATIONS.

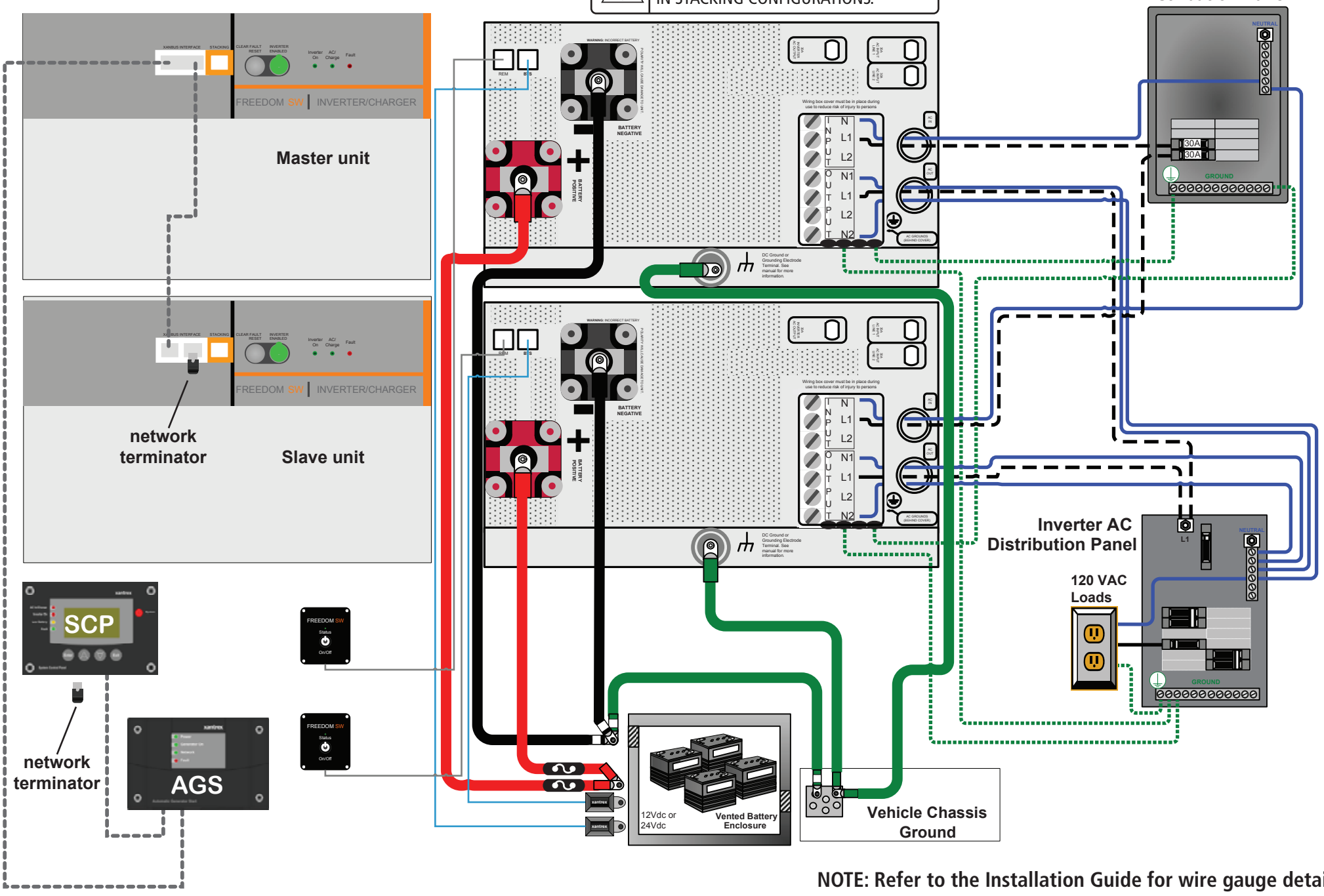

NOTE: Refer to the Installation Guide for wire gauge details.

Freedom SW Inverter/Charger Series Stacking Configuration

120 and 240 VAC

CAUTION

DO NOT USE **INPUT L2** AND **OUTPUT L2** IN STACKING CONFIGURATIONS.

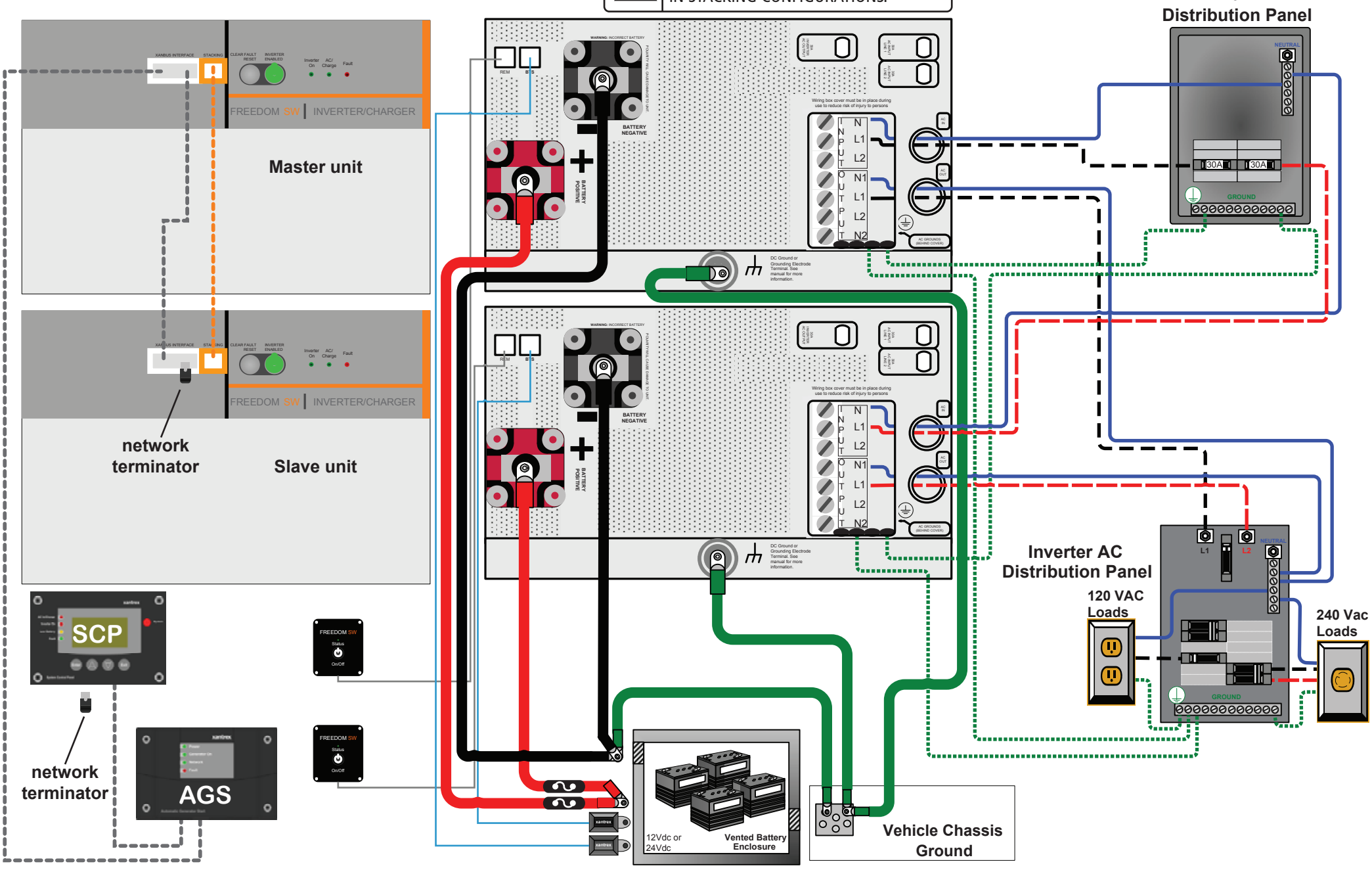

NOTE: Refer to the Installation Guide for wire gauge details.