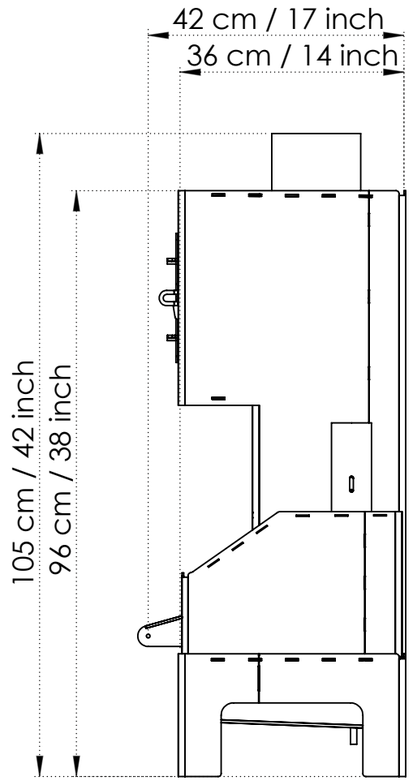

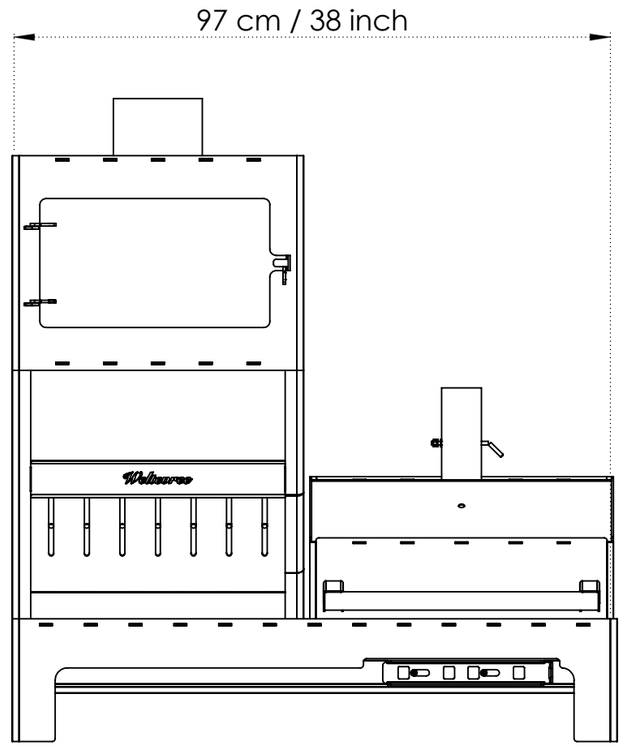

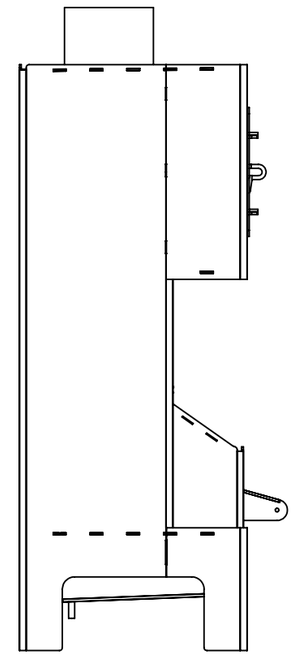

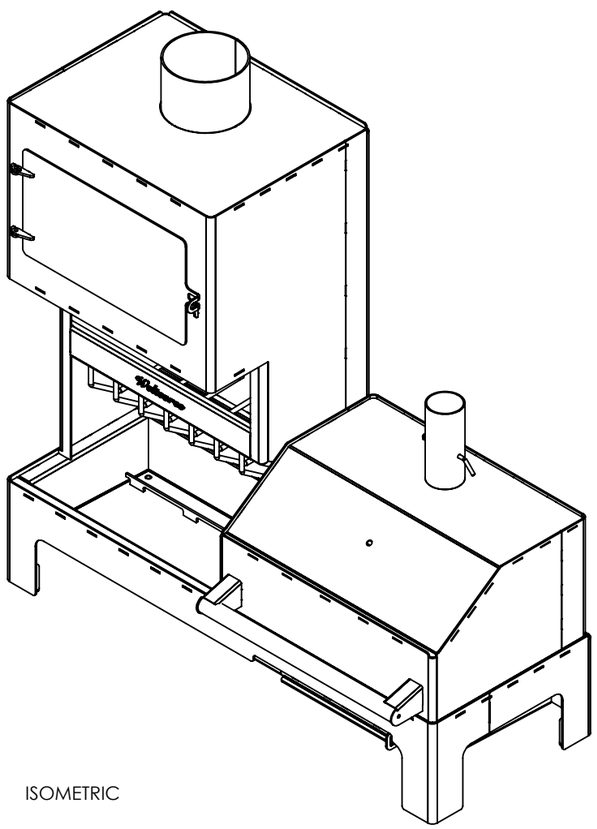

ISOMETRIC

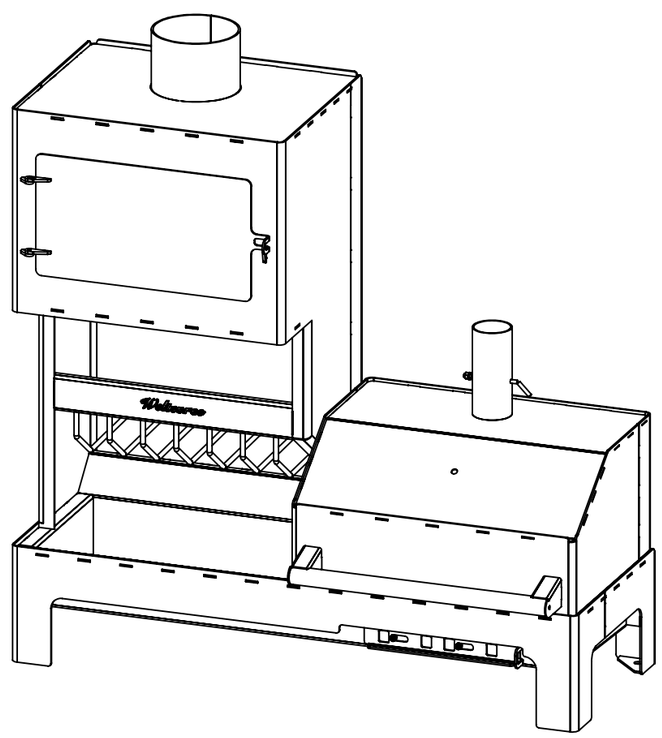

TRIMETRIC

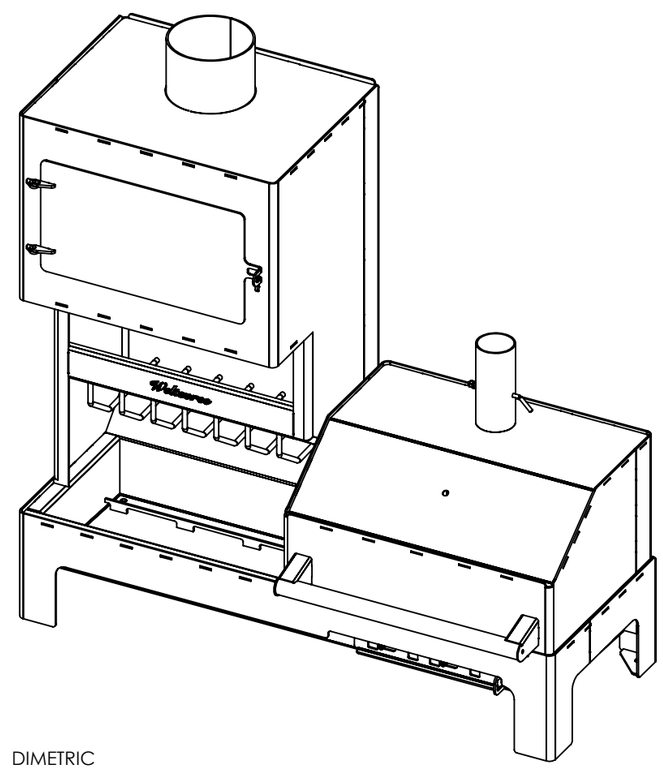

DIMETRIC