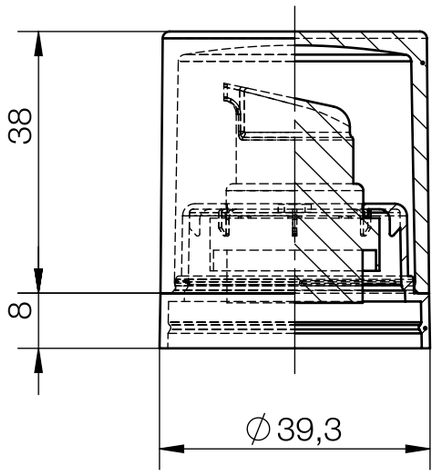

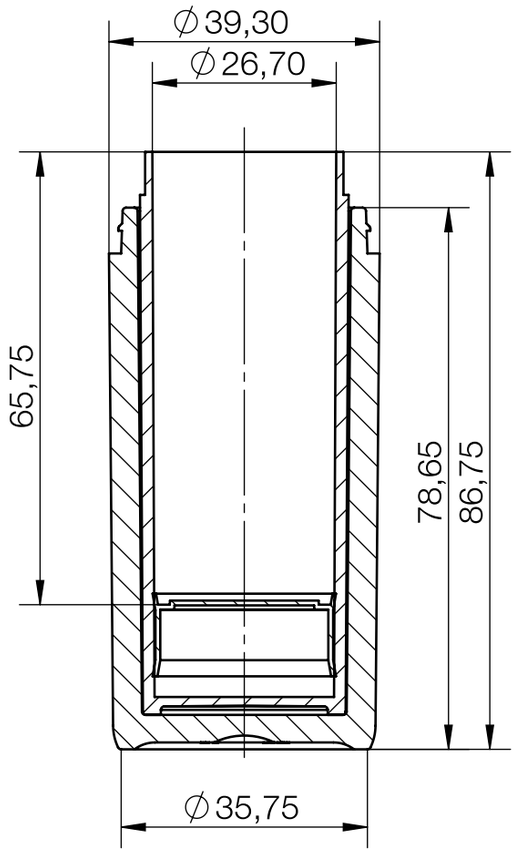

PRODUCT: Regula Airless 30 ml - ABT10-146	
DESCRIPTION: 30 ml Airless Bottle	MATERIAL: SAN, PP
DIAMETER: 35.75mm	TOTAL HEIGHT: 118mm
DOC TYPE: TECHNICAL DRAWING	DATE: 3/31/21

instockpack.