	CLFSC60SS	

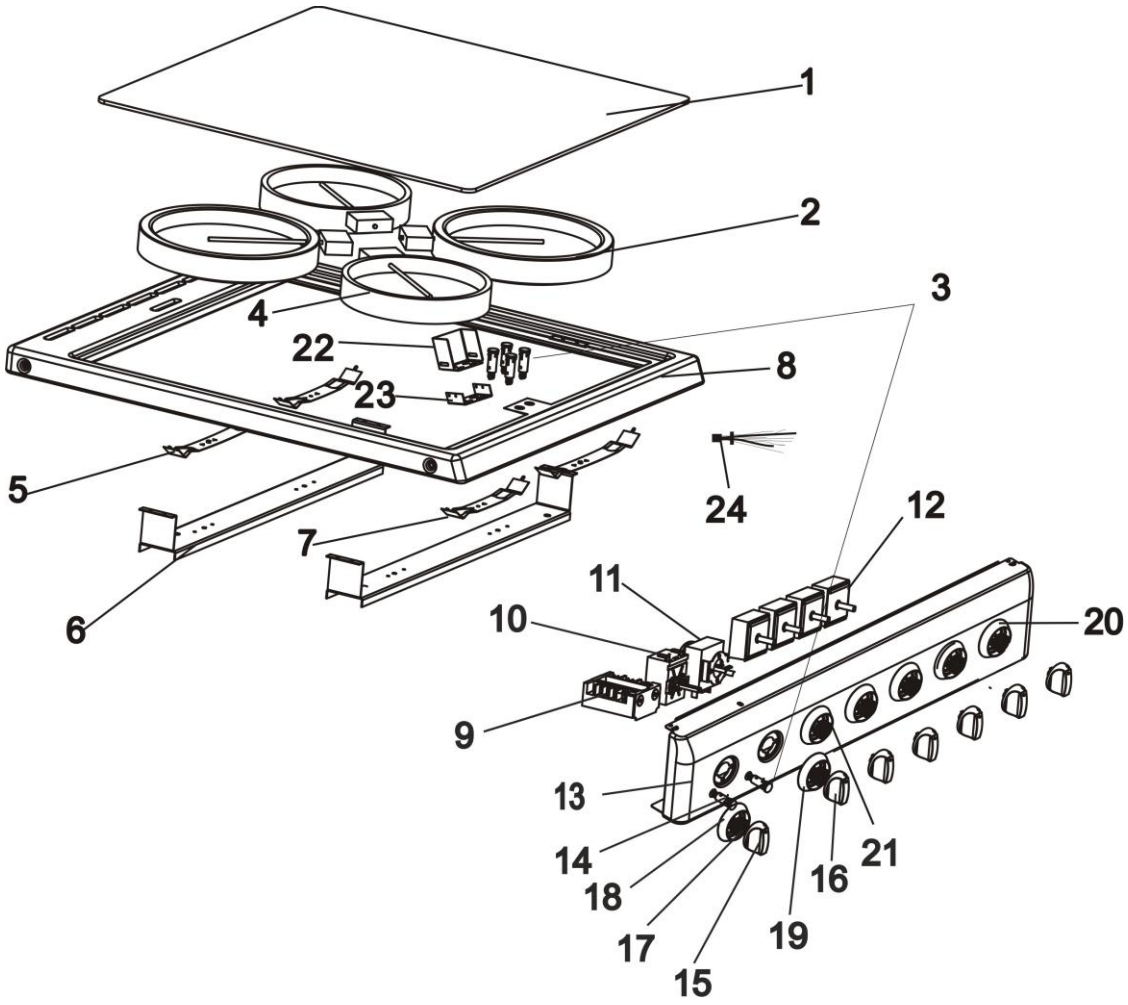

	CLFSC60SS	

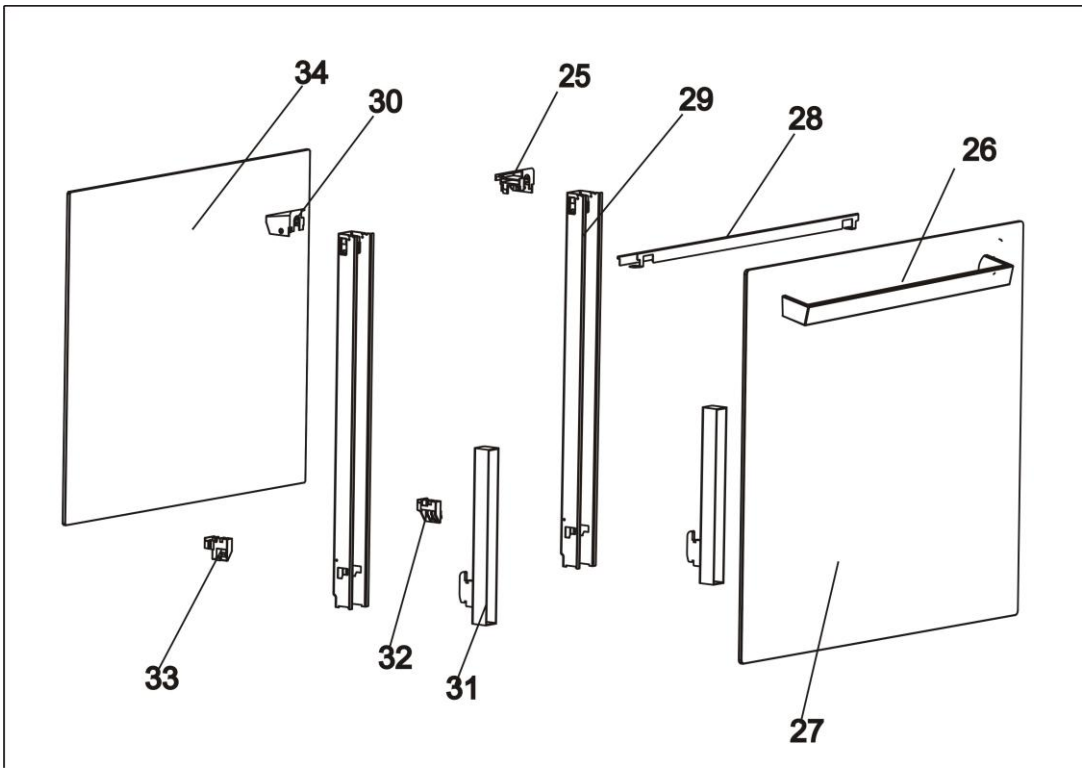

CLFSC60SS

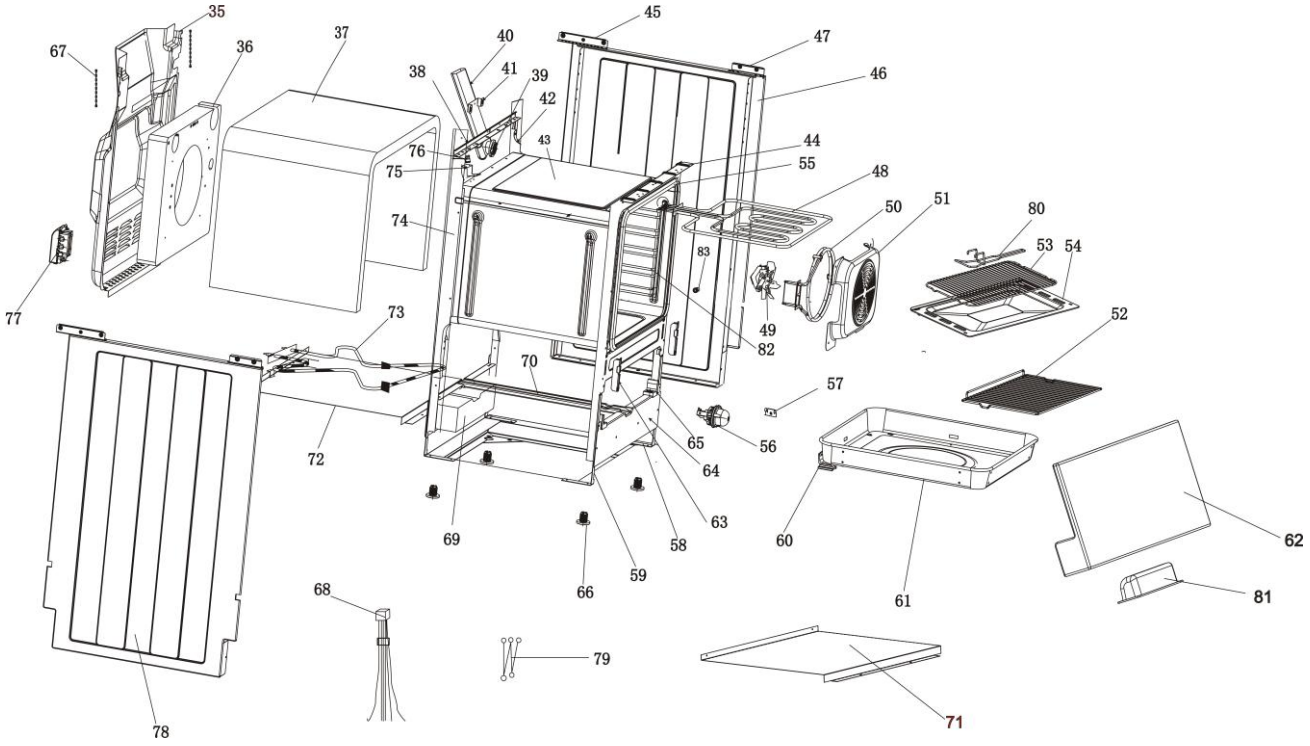

35
67
36
37
40
38
41
39
42
43
76
75
74
45
47
46
44
55
48
50
51
80
53
54
83
49
82
52
77
73
70
57
72
65
56
64
63
69
58
60
62
59
66
61
81
68
79
71
78