MOLDING	

DATE	REV.	REVISION	DRAFTING	CHECKED
2019.06.13	A/0	NEW	DGY	

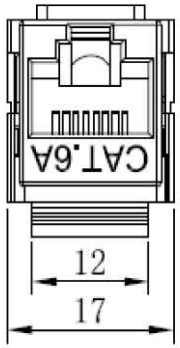

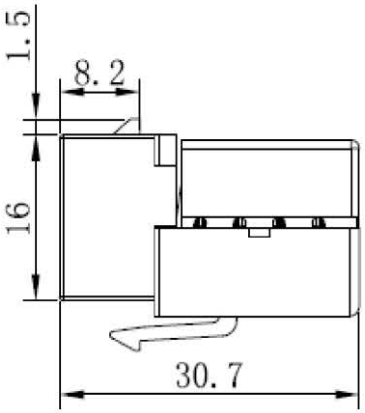

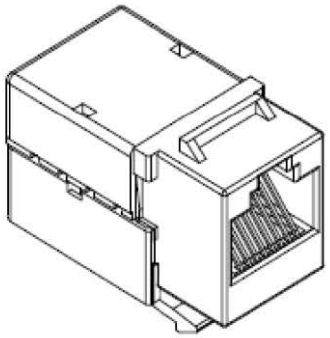

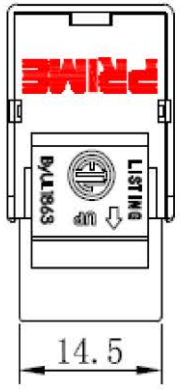

PIN/PAIR ASSIGENMENTS

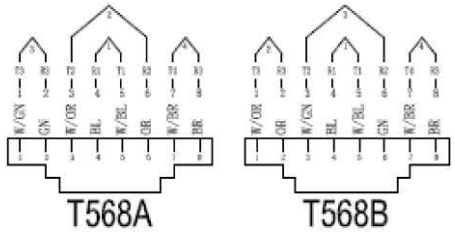

SPECIFICATION

1. Housing material: Self-extinguished plastic UL 94V-0.
   Insert material: PC UL 94V-0 rated.
   Contact Finished: 50 micro-inch gold over, Nickel 40 micro-inch.
   Color:White,Ivory,Blue,Orange,Red,Black.
2. IDC Housing: Self-extinguished plastic UL 94V-0,Color:Black.
   IDC Terminal: Phosphor Bronze, nickel plated 50-80 micro-inch.
3. P.C.Board: FR4,1.6mm.
4. Operation Temperature : -10°C to 60°C.
5. Insertion Force: 900gms for 8 contacts.
6. Retention Strength : 7.7 kgs between jack and plug.
7. Durability : 750 Cycles contact resistance test check every 100 Cycles.Insertion cycles at 20 cycles/minute max.
8. Certifications: FCC、ANSI/TIA-568.2-D

ELECTRICAL

1. Current rating:1.5 Amps
2. Insulation resistance:500 MΩ
3. Contact resistance:20 mΩ
4. DC resistanc:0.1 Ω
5. Dielectric withstanding voltage:500 V

Part Number	Color
KJ31017222	Blue
KJ31017228	White

Unless specified on the drawing, tolerances are per the follows:

X. ±0.30 X° ±3
.X ±0.20 .X° ±0.3
.XX ±0.10

DRAW. NO		TITLE	Cat.6A Mini 90° Unshielded Keystone Jack 110 type			
CUSTOMER						
CUST'R P/N		DRAW	DGY	DATE	2019.06.13	
SCALE	1 : 1	CHECK		DATE	2019.06.13	
UNIT	mm	APPROVED		SHEET	1 OF 1	

Material		Part Number		Note	■ RoHS	□ Reach	□ GP	□ HF	□ Other	RD