MOLDING	

DATE	REV.	REVISION	DRAFTING	CHECKED
2019.04.02	A/0	NEW	JHY	YAO

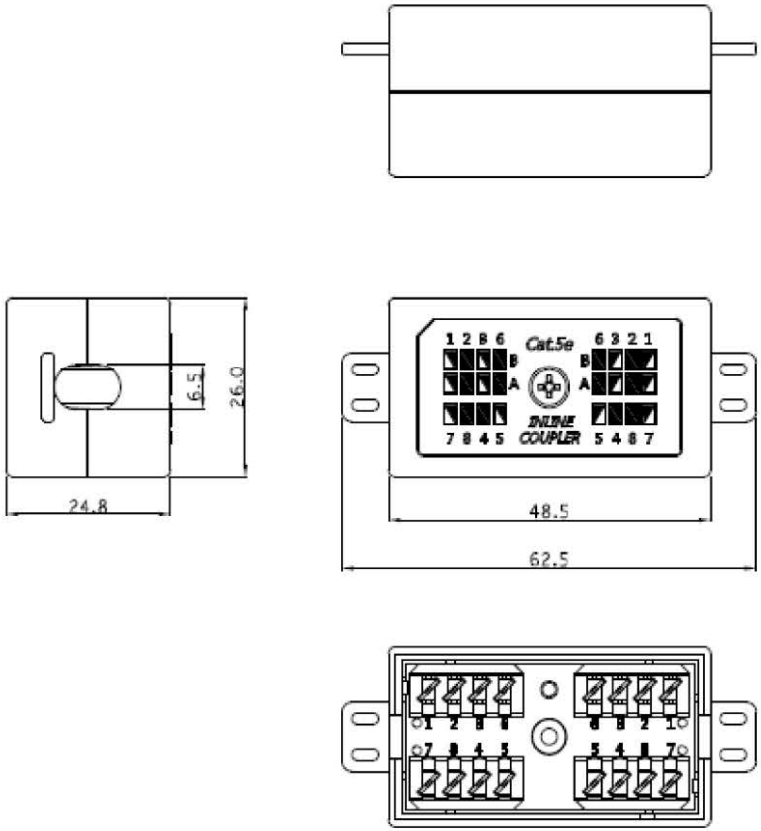

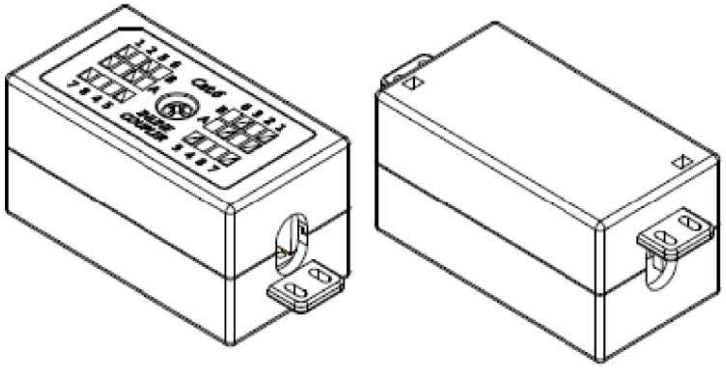

PIN/PAIR ASSIGENMENTS

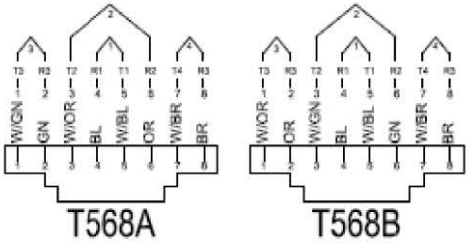

SPECIFICATION

1. Housing: ABS,UL 94V-0.
2. IDC Plastic: PC.
3. PCB: FR-4, T=1.6mm.
4. IDC CONDUCTOR: 0.5mm Phosphor bronze, tin-plating.
5. Operation Temperature : -10°C to 60°C.
6. Color: White.

ELECTRICAL

1. Current rating: 1.5 Amps
2. Insulation resistance: 500 MΩ
3. DC resistance: 0.1Ω
4. Dielectric withstanding voltage: 500 V

PRIME®

Unless specified on the drawing, tolerances are per the follows:							
X. ±0.30 X° ±3	DRAW. NO	GFZD-S190026	TITLE	Cat.5e Unshielded In-line Coupler, Block Type(Junction Box), Dual Type IDC			
.X ±0.20 .X° ±0.3	CUSTOMER						
.XX ±0.10	CUST'R P/N	IC21020018	DRAW	JHY	DATE	2019.04.02	
	SCALE	1 : 1	CHECK		DATE	2019.04.02	
	UNIT	mm	APPROVED		SHEET	1 OF 1	

Material		Part Number		Note	☑ RoHS	☐ Reach	☐ GP	☐ HF	☐ Other	RD