OPERATION & SERVICE MANUAL

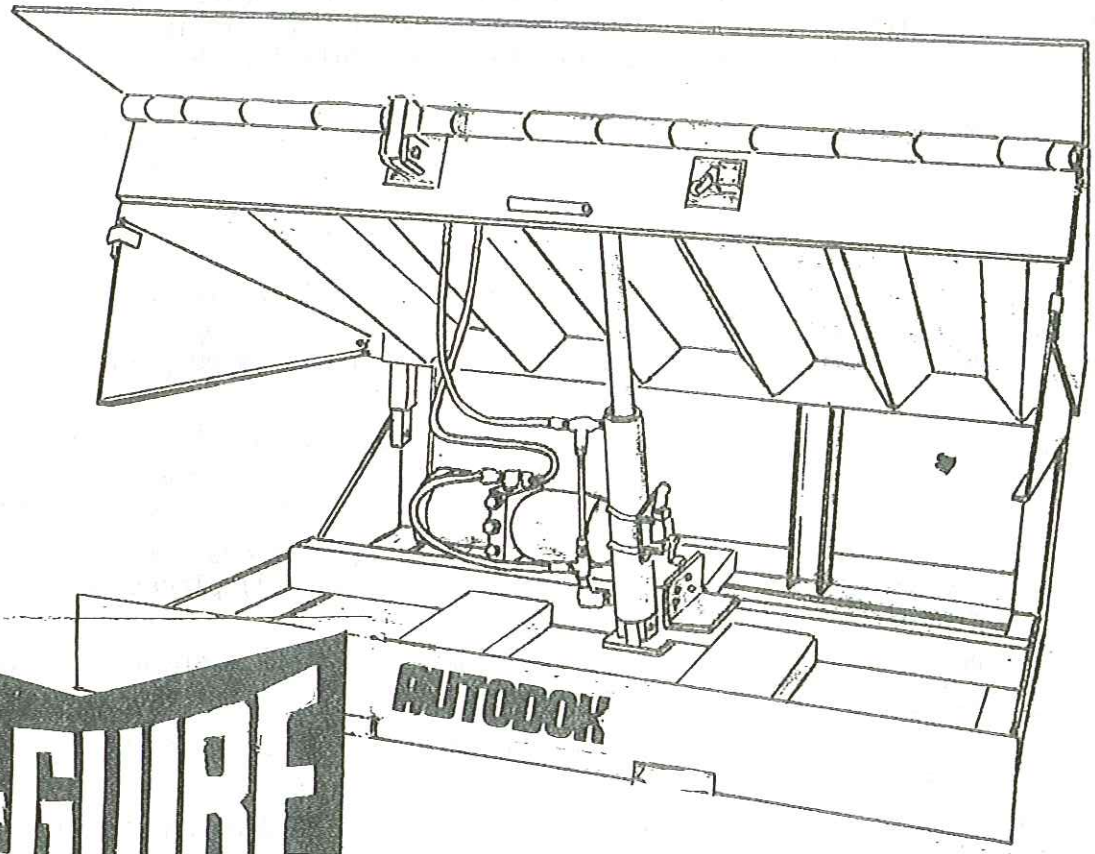

McGUIRE autodok

HYDRAULIC DOCK LEVELER

ML-8 SERIES

INSTALLATION INSTRUCTIONS

* Check Dock Leveler for possible damage in transit.
* Check pit for accuracy of all dimensions and make sure pit is square.
* Install control cabinet and pull leads from cabinet, per wiring diagram, thru conduit and into junction box at rear of pit. It is a factory recommendation that the motor leads be left to extend full length of pit from junction box for temporary power source.
* Move dock leveler with a fork truck using fork slots built into the front base frame of unit. Position leveler so that rear of frame is adjacent to front of pit.
* Cut shipping strapping and completely remove from leveler pit.
* Connect temporary extended motor leads to leads in rubber covered cable from motor. NOTE: On polyphase current check for proper motor rotation per wiring diagram. If leveler does not raise when pump is energized, rotation is wrong.
* Place leveler within pit with one inch clearance between ramp and pit wall each side, with face of ramp frame flush with face of curb angle at bottom of pit. Rear frame angle should also be tight to rear curb angle for welding.
* Shim leveler to proper height, in nine (9) places - four (4) places equally spaced under the front of base frame - four (4) places equally spaced under rear of base frame and under cylinder pad.
* Put power to control cabinet and move leveler platform to fully raised position using push button control.
* Use safety maintenance leg mounted under the deck to support platform in its raised position.
* Make permanent electrical hook up per wiring diagram and close junction box.
* Weld shims to dock leveler base frame, weld front shims to front curb angle, weld shims under cylinder clevis to the pad and weld upper rear frame member to rear pit curb angle 4" - 12" pattern.
* Operate leveler to store maintenance leg and allow leveler to automatically return to stored position.
* Mount bumpers to dock face locating flush with top of dock or about 48" above ground line. If dock line is considerable lower than this dimension, bracing behind bumper will be required. Mount bumper inside edge flush with pit side wall.
* Operate leveler thru a few complete cycles after installation to check for consistant future operation. (Allow about a minute dwell time between cycles).
* Leave operation and Service Manual with customers' Plant Engineer or Maintenance Foreman.

OPERATING INSTRUCTIONS

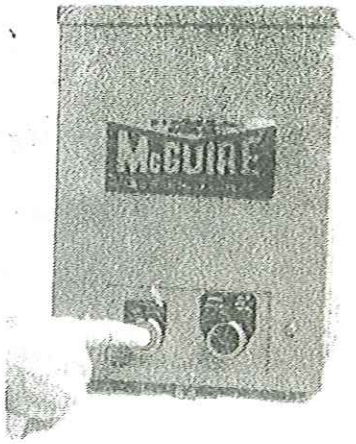

NORMAL OPERATION

Press and hold "OPERATE" Push Button on remote mounted control box. The platform will raise to the top of its travel and the lip will extend. When the lip is fully extended release the Push Button. The platform will lower smoothly until the lip rests on the truck bed. The rest of the *AUTODOK* Leveler operation is fully automatic. The platform will float freely with the rise and fall of the truck bed. When the truck leaves, the lip becomes unsupported and if a load is not on the board, the Leveler settles to its fully lowered position and the motor automatically restarts The Leveler raises, the lip is withdrawn and the motor automatically stops. The Leveler then settles to its stored, cross traffic position.

If you want to store the Leveler while a truck is at the dock, proceed as follows: Press and hold the "OPERATE" Button until the platform has raised and the lip is fully withdrawn, release the Push Button. The Leveler will settle to its stored, cross traffic position.

AUTOMATIC SAFETY STOP

If the lip becomes unsupported while a load of approximately 400 lbs. or greater is on the deck, the Hydraulic System will automatically lock the deck in position. To restore the Leveler to normal operation, remove the load and press the "OPERATE" button momentarily.

BELOW DOCK LIP CONTROL

In normal Below Dock position the lip is against the dock face. Procedure: Switch the control selector from Normal Operation to Below Dock Lip Control. Press and hold the "OPERATE" Push Button until the platform raises and the lip moves out a few inches. The motor will shut off automatically and the Leveler will settle to its fully lowered position.

For extremely low trucks: It is possible to go to Below Dock Position with the lip extended. Procedure: Leave the selector switch in Normal Operation Position. Press and hold the "OPERATE" Push Button until the lip fully extends. Release the "OPERATE" Button and switch the selector switch from Normal to Below Dock Lip Control position. The Leveler will settle to its fully lowered position with the lip extended.

A. Return to cross traffic position: Switch the control selector back to "Normal Operation" and the *AUTODOK* Leveler will automatically return to cross traffic position.

B. Return to normal lip extended position: Switch the control selector back to "Normal Operation" and press and hold the "OPERATE" button until the lip extends. The Leveler then continues through its Normal Operation Cycle.

DESIGN & CONSTRUCTION

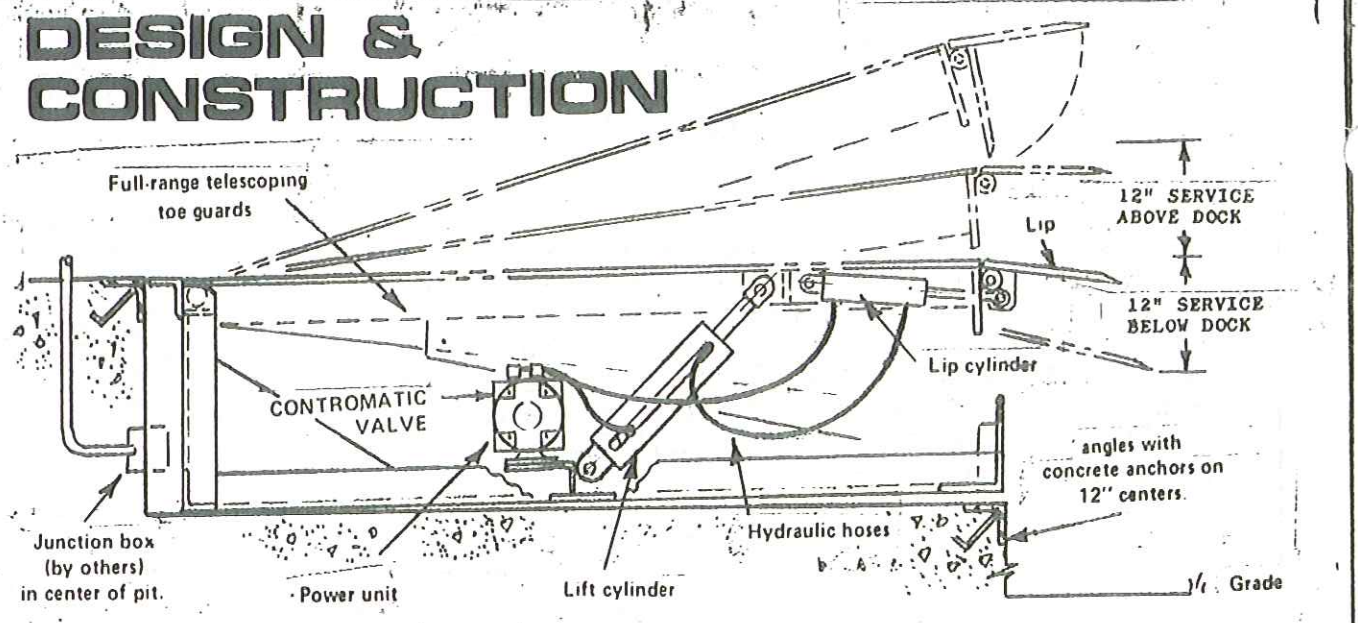

The McGUIRE *AUTODOK* Leveler consists of a complete structural steel base frame and up-pivoting platform with hinged lip. Base frame requires no cast-in anchors or bolt and expansion shield hold downs. (See installation instructions). The Leveler is powered by 1 HP single or polyphase electric motor complete with manifold block and reservoir. The gear pump, with suction strainer, is mounted in the reservoir and direct coupled to the motor through the manifold block. The main lift cylinder is piped for regenerative differential action. Piping of cylinder incorporates a Fail Safe arrangement to guard against sudden and excessive drop of the platform if the lip becomes unsupported while the Leveler is in use.

The lip-actuating cylinder is mounted under the platform and is controlled by hydraulic fluid flow through the Contromatic Valve. Fluid Power extends the lip; supports the lip during platform decent and retracts the lip to a pendent position for storage. Flexible hoses connect both cylinders to the power unit.

McGUIRE *AUTODOK* Leveler has an Automatic Return to cross traffic feature. The Leveler restores itself to safe floor level position after a truck moves out from under the extended lip. The *AUTODOK* also has a Below Dock Position feature where the lip is partly extended to clear the face plate on the base frame and allows the platform to proceed to its lowest position.

Electrical leads from pump motor and integral control switches are factory wired, ready to hook to leads in the junction box in rear wall of pit (See Pit Layout Drawing #6062-99 and Wiring Diagrams #6062-93 and #6062-94 for further information). A factory-wired control cabinet is furnished with each Leveler. Connections between terminals in the cabinet and pit junction box are to be furnished by others, prior to the installation of the *AUTODOK* Leveler. (See Installation Instructions and Wiring Diagrams for more details.)

Lip hinge rod and all cylinder clevis pins are factory-coated with lubricant. No further lubrication is required.

The McGUIRE *AUTODOK* Leveler incorporates the principle of controlled oil flow from the main lift cylinder during unpowered lowering cycle. This is accomplished thru factory set valve in the manifold block thus assuring a smooth, gentle lowering motion with complete safety.

RETURN SWITCH ARRANGEMENT

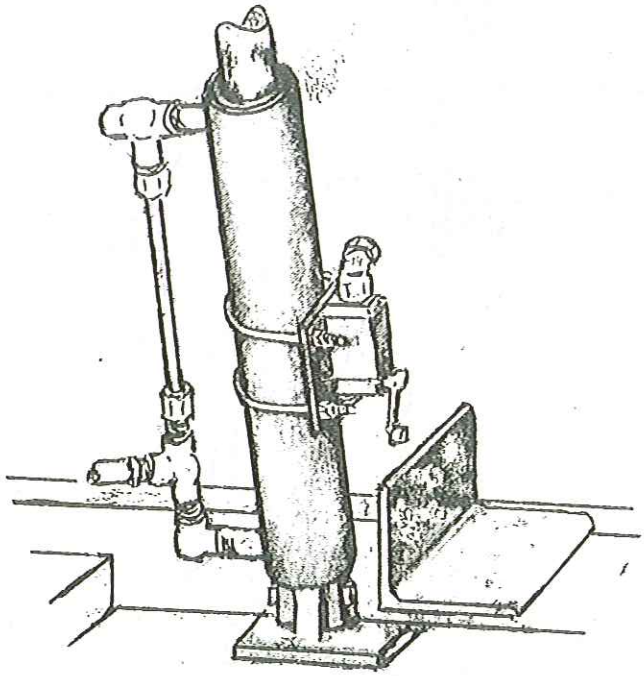

NORMAL CYCLE:

The return switch assembly and tripper blocks have been factory positioned and adjusted for proper operation of the Leveler.

The limit switch mounted on the main cylinder is a maintained contact type in a sealed enclosure and its function is to start and stop the pump motor in the return to cross traffic cycle. The front adjustable block on the angle frame is set to trip the limit switch and start the motor when the platform has fully lowered. The rear adjustable block is set to trip the limit switch and stop the motor when up travel is sufficient for the withdrawn lip to clear the base frame.

BELOW DOCK CYCLE:

When the selector switch on the operators control panel is switched to "Below Dock" the return action of the limit switch is by-passed in the control circuit.

When the selector switch on the control panel is switched to "Normal" position, the normal control circuit is completed, the motor starts and the return to cross traffic cycle commences.

AUTODOK FEATURES

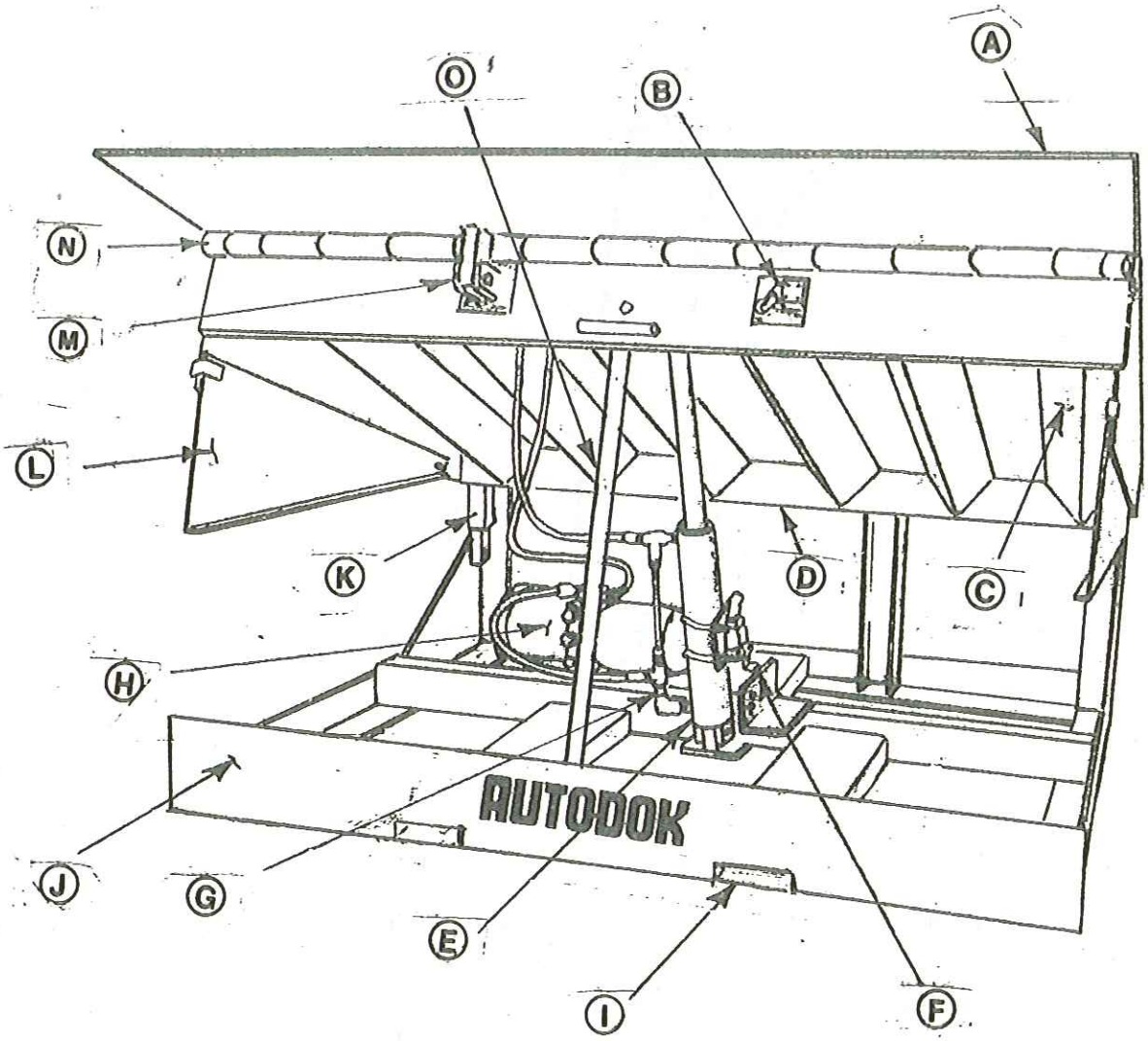

Ⓐ Lip & Deck Steel Safety Tread
Minimum yield 55,000 PSI

Ⓑ Below Dock Position Lip Control.

Ⓒ Non-Racking Rigid Frame Deck, Welded Bridge-Type Construction with V-Stiffeners.

Ⓓ Structural Support, Full-Width Rear Hinge.

Ⓔ Main Lift Cylinder: 20,000 Lb. Cap. 3" Dia., 40,000 Lb. Cap. 4" Dia., 60,000 Lb. Cap. 2-4" Dia.

Ⓕ Automatic Return to Cross-Traffic Control.

Ⓖ Fail-Safe Control Locks Board in Position When Under Load.

Ⓗ Hydraulic Pump Package with Contromatic Control for Automatic Hydraulic Operation.

Ⓘ Fork Lift Slots for Safe In-Transit Handling. Easy At-Site Movement & Installation.

Ⓙ Base Frame-Structural Steel Weldment.

Ⓚ Floating Rear Hinge for 4" Canting Action.

Ⓛ Full Range Telescoping Toe Guards.

Ⓜ Hydraulic Cylinder to Raise, Hold, Lower Lip.

Ⓝ Continuous Barrel-Type Hinge.

Ⓞ Safety Support Leg.

SPECIFICATIONS

COMPONENT SPECIFICATIONS

MOTOR: 1HP, TENV, NO. 56 FRAME, 15 MINUTE DUTY CYCLE

MOTOR VOLTAGE (ALTERNATING CURRENT)	RPM	Hz	PHASE	AMP. DRAW MOTOR RUNNING	ELECTRIC SERVICE AMPERAGE REQUIRED
115	3450	60	1	15.0	30 *
230	3450	60	1	7.5	20
208-220-240	3450	60	3	4.0	10
440-460-480	3450	60	3	2.0	10
380	2850	50	3	2.0	10

*Sufficient voltage must reach the Leveler control cabinet to operate the 1HP motor which draws 25 amps starting and 15 amps running. Voltage drop caused by wiring a long distance or undersize wire will increase the amperage and kick out the breaker. We recommend #10 wire on short runs from the electrical source to the control cabinet and #8 wire on long runs.

RETURN SWITCH:

Maintain contact type oil tight enclosure, roller lever actuate arm, adjustable tripper arrangement.

LIP CONTROL SWTICH:

Normally open, held closed actuated by below dock selector switch (at control cabinet) oil tight enclosure.

FLUID CONTENT:

Aircraft hydraulic fluid type BB, pour point -75 degrees (f)

REPLACEMENT HYDRAULIC FLUID:

Aircraft hydraulic fluid type BB (Available from the factory)
Acceptable substitute** Automobile automatic transmission fluid Type F (Ford Motor Company cars) pour point -55 degrees (f)
(second choice)_____ Automobile automatic transmission fluid Type A (all transmissions except Ford) pour point -50 degrees (f)

SYSTEM CAPACITY:

20,000# Levelers----------5 1/2 quarts
30,000# Levelers----------6 1/2 quarts
40,000# Levelers----------6 1/2 quarts
60,000# Levelers----------13 quarts

TANK CAPACITY:

20, 30 & 40----------4 quarts
60,000# Levelers----------8 quarts
Tank full line - 20,000# (deck up) 1 1/2" below top of tank
Tank full line - 30,000# (deck up) 2 1/2" below top of tank
Tank full line - 40,000# (deck up) 2 1/2" below top of tank
Tank full line - 60,000# (deck up) 2 1/2" below top of tank

**Adding Transmission Fluid to Aircraft Fluid is acceptable.

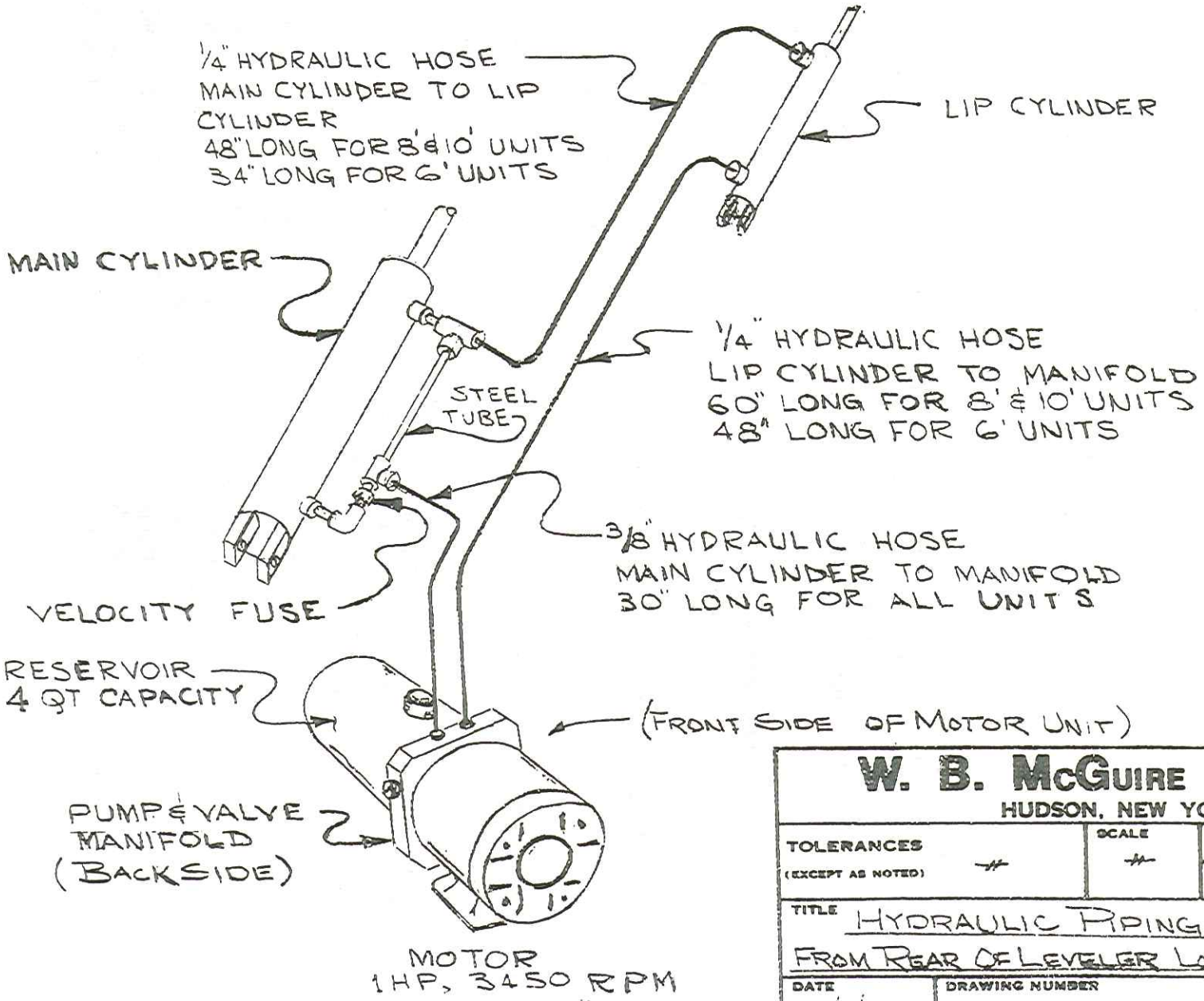

W. B. McGUIRE CO., INC.
HUDSON, NEW YORK

TOLERANCES (EXCEPT AS NOTED) -#-	SCALE -#-	DRAWN BY
		APPROVED BY

TITLE HYDRAULIC PIPING AS VIEWED FROM REAR OF LEVELER LOOKING FOWARD

DATE	DRAWING NUMBER
9/9/76	6062-98

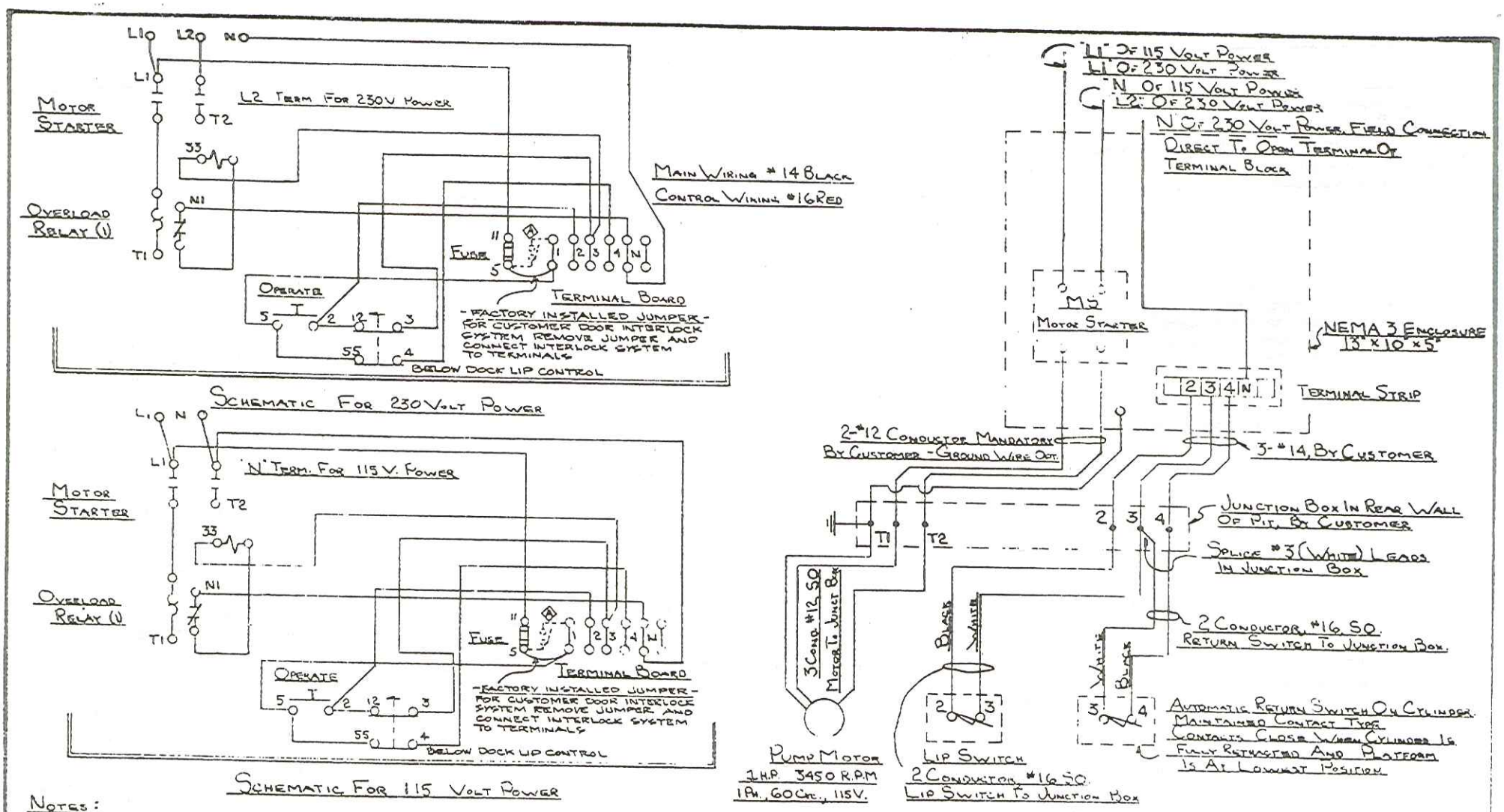

Notes:

Internally Wired Control Cabinet, With Push Button And Toggle Switch In Cover, Furnished By W.B. McGuire Co., Inc. Motor, Return Switch And Lip Switch Internal With Leveler, Pre-Wired And Ready To Connect To Customer's Leads In Junction Box.

Sufficient Voltage Must Reach The Leveler To Operate The 1 H.P. Motor. Voltage Drop At The Leveler Caused By Wiring A Long Distance Or Undersize Wire Will Increase The Amperage And Trip The Breaker. We Recommend #10 Gauge Wire On Runs Up To 50 Feet Long And #8 Gauge Wire On Runs Over 50 Feet Long For 115V Circuit. For 230V Circuit A Reduction In Wire Size Is Possible.

Wiring Diagram For Hydraulic Dock Leveler - Single Phase Power - 115 Or 230 Volt

B	Revised Note Section ECN 77-026	4-25-77 DICK
A	Added Door Interlock Switch Option ECN 76-025	10-25-76 DICK
	Revisions	Date

W. B. McGuire Co., Inc.
Hudson, New York

Drawn By	Date	Checked By	Date	Scale
L.M.T.	8/3/00			

6062-93

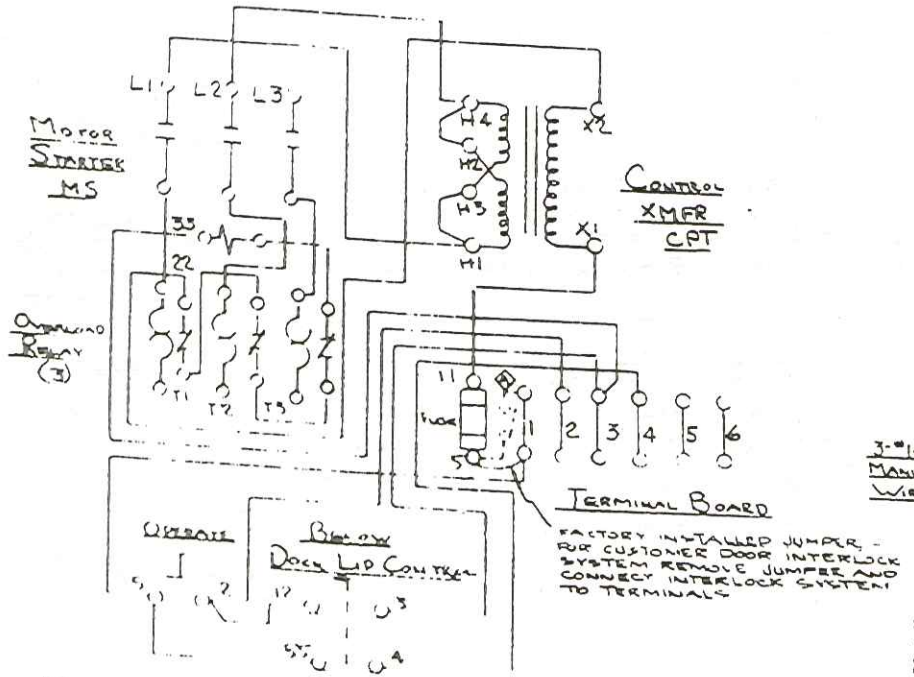

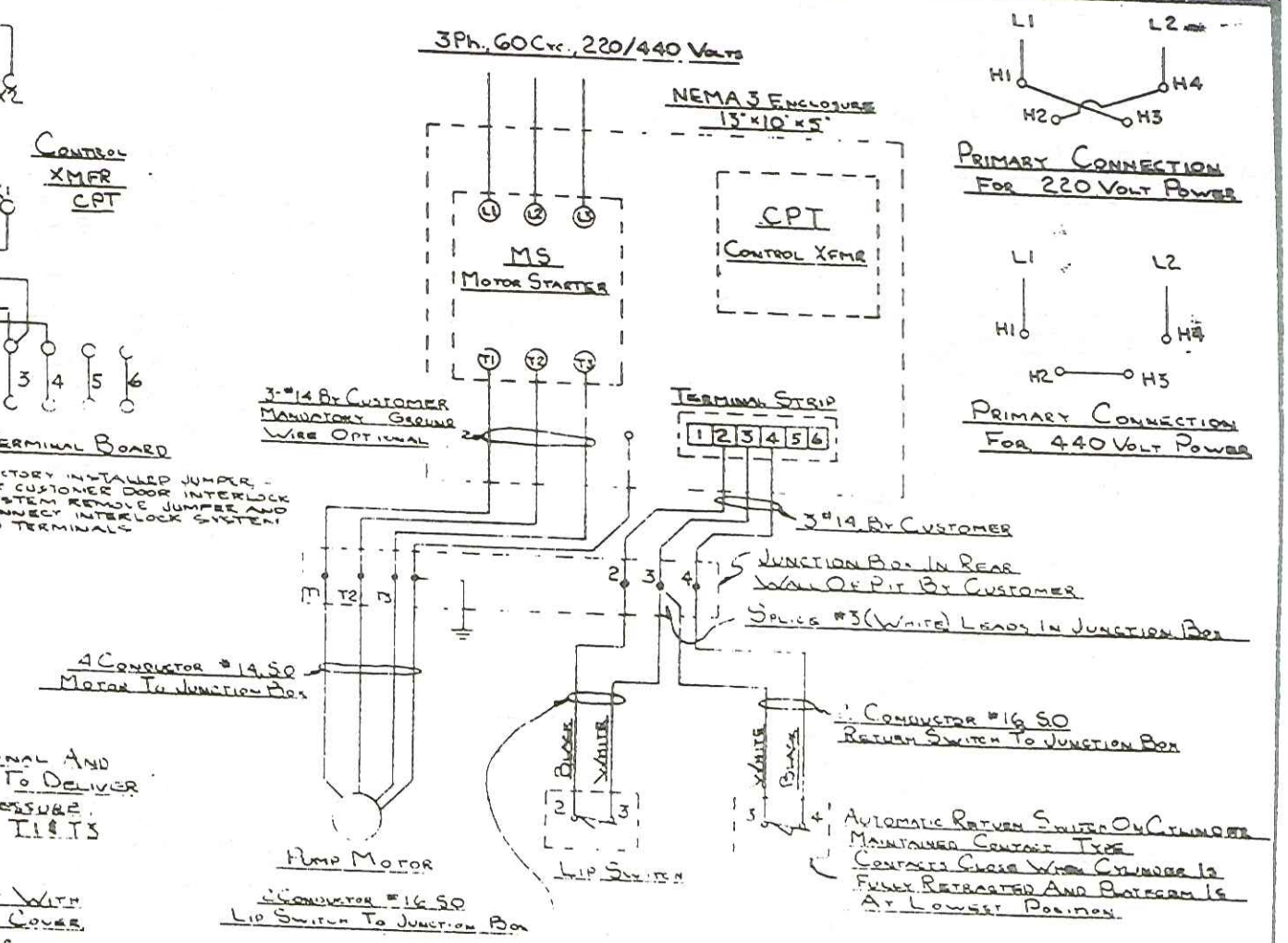

Notes:

Hydraulic Pump Is Uni Directional And Must Turn In Proper Direction To Deliver Pressure To System If No Pressure (Wrong Rotation) Reverse Lines T1 & T3 At Starter Terminals.

Internally Wired Control Cabinet With Push Button And Toggle Switch In Cover. Furnished By W B McGuire Co. Inc. Motor Return Switch And Lip Switch Internal Wiring Leads Are Wired And Ready To Connect To Customer Leads In Junction Box.

Wiring Diagram For Hydraulic Dock Levelers Polyphase Power

A Added Check Interlock Switch Option 11-14-96

Revisions

W. B. McGuire Co., Inc.
Hudson, New York

Drawn by CWMT Date 8/7/96 Checked by RJW Date

6062-94

SERVICE NOTES

SERVICE NOTES:

REMEMBER! A motor can burn out because of one of the following reasons:

1. Hookup to incorrect line voltage.
2. Single phasing of polyphase motor caused by a blown fuse or loss of one leg of supply.
3. Low voltage feed to motor due to insufficient line capacity. Most common to 120V single phase operation. The motor is 1HP and on 120V single phase current, draws 15Amps. (See spec. page for electrical requirements)

POWER UNIT:

Although power units are field servicable, those unfamiliar with the unit should NEVER attempt to disassemble or repair a unit. Completely assembled preadjusted replacement power units are available from the factory. Remember, all hydraulic components of an *AUTODOK* System are covered by the manufacturers warranty. Out of warranty major components, power units and cylinders are available from the factory on an exchange price basis.

PREVENTIVE MAINTENANCE:

1. To check the components under the Leveler platform, push and hold the "OPERATE" Push Button until the platform is in its fully raised position. Place the Leveler Safety Leg in a brace position under the platform. Jog the Push Button until the lip is in a retracted position. Place the disconnect in "OFF" position and tag.
2. To check the fluid in the power unit remove the filler/breather cap from the top of tank. See specification page for correct oil level. The system has been factory filled with Aircraft Hydraulic Fluid, Type BB. A compatible substitute is Automatic Transmission Fluid. (Ref. specification page for replacement fluid). Be sure to replace the filler/breather cap.
3. An occasional inspection of cylinders and hoses should be made to guard against possible loss of fluid. Replacement hoses, cylinder repacking kits and replacement cylinders are available.
4. Good housekeeping practices should be followed. Remove any debris from under the Leveler. Clear the hinge area of any collected debris. During the winter months ice formed on any moving parts should be removed prior to operating the Leveler.

TROUBLE-SHOOTING ANALYSIS

Symptoms with possible causes and corrective action given in sequence of priority in accordance with standard trouble shooting practice.

A. DOCK RAMP WILL NOT RISE (MOTOR NOT RUNNING):

1. Incorrect or disconnected electrical hook up - Review wiring diagram and check connections.

2. Blown fuses or open circuit breaker - Check fuses & replace. Reset circuit breakers. Determine & correct source of electrical problem.

3. Loss of line voltage - Check line & repair as necessary.

4. Open over-load relays on motor starter (3 ph) - Allow to cool & reset by pushing in the three white buttons at starter.

5. Burned out motor - Replace power unit. (Contact factory)

**NOTE: Investigate cause of any above prior to taking corrective action.

B. DOCK RAMP WILL NOT RISE (MOTOR RUNNING OR HUMMING):

1. Motor humming (1 ph current) - Voltage drop due to insufficient line capacity. Amperage will raise causing blown fuses, trip circuit breakers or motor hum. Test for voltage at the motor starter with the motor running and also test for amperage drain. Low voltage/high amperage indicates the feed line is too light for the distance of run. Replace feed line with adequate wire size.

2. Wrong rotation of 3 ph motor - Reverse T1 & T3 at starter terminals.

3. Motor single phasing (3 ph current) - Check line fuse or other loss of power in one line.

4. Load on dock ramp - Remove the load, the Dock Ramp is not designed to lift more than its own weight.

5. Low fluid or no fluid - Check level and fill as necessary. (Check specs), determine and correct cause of loss.

6. Motor or pump package physically or electrically damaged - Replace.

-continued-

RAMP WILL NOT AUTOMATICALLY RETURN FROM BELOW DOCK.

1. Change selector switch position from "Below Dock" to "Normal".
2. Return switch arm has not engaged tripper block. Adjust tripper block or rotate switch clamp to proper alignment. See prior page on Return Switch Arrangement for description of operation.

C. DOCK RAMP WILL NOT LOWER (LIP EXTENDED):

1. Physical obstruction.....Check and remove.
2. In Fail Safe position.....Actuate the push button momentarily to unlock the System.

D. CONTROL VALVE FUNCTION AND ADJUSTMENT:

McGuire *AUTODOK* Levelers are shipped only after thorough testing and adjustment and are ready for installation. Control valve adjustments are not normally required and valves should not be adjusted except to alleviate definite malfunctions.

Control valves are cartridge type with cartridges arranged about a valve manifold block. To avoid disturbing cartridge, a wrench should be used to secure shoulder of cartridge while adjusting screw cap is being removed. Adjusting screw caps are sealed to cartridge body with a metal ring gasket. Take caution against damaging or losing this ring as it must be replaced to avoid leakage.

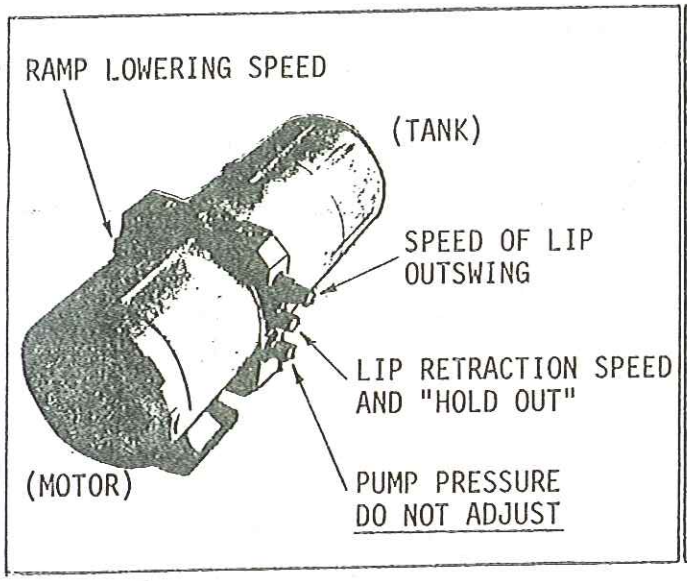

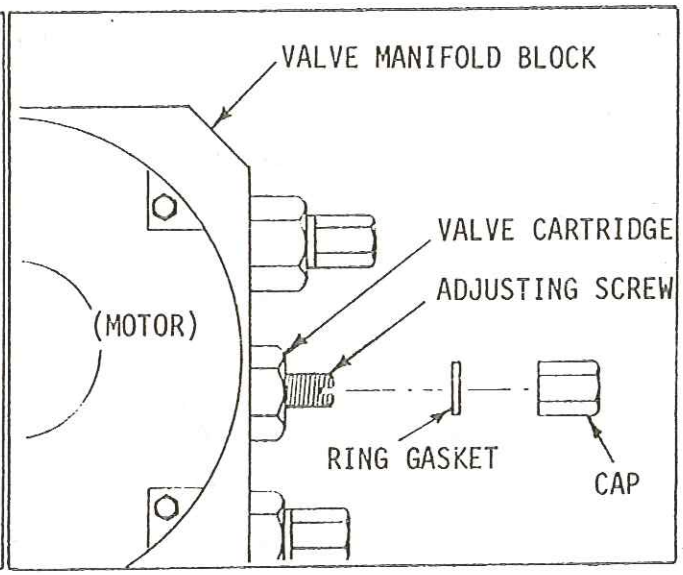

On face side of valve block; Top valve controls out swing of lip. Remove cap and turn adjusting screw out (counter clockwise) to increase speed of lip swing. Turning screw in (clockwise) will slow down out swing.

Center valve controls retraction speed of lip during recycle operation of Leveler. This valve will also affect "hold out" of lip. Turning screw out (counter clockwise) will make lip return faster and harder. However, too far out will allow lip to sag. If lip "sags" screw must be turned in slightly. Turning screw in excessively will slow return action of lip. (read paragraph E before attempting adjustments)

- continued -

Bottom valve regulates pump pressure. Turning adjusting screw in (clockwise) increases pump pressure. Turning screw out (counter clockwise) will decrease pressure. THIS VALVE SHOULD NOT REQUIRE ADJUSTING IN THE FIELD. Contact factory before attempting to make pressure adjustment.

The valve located on the back side of valve block controls the lowering speed of the main platform. Turning screw "in", clockwise, will decrease rate of decent. Turning screw "out", counter clockwise, will increase rate of descent. It should not be necessary to adjust this valve in the field.

E. LEVELER LIP SAG: CORRECTION PROCEDURE

1. Operate Leveler in normal fashion. When Leveler is in full "UP" position, with lip extended, release control button and place toggle switch in Below Dock position.

2. After platform has settled to full Below Dock position, push lip down as far as possible (1).. (2). Lift lip and drop as hard as possible several times fig.(3).. Check for "Sag" by operating Leveler in normal manner. (place toggle switch in Normal position). If lip continues to "SAG", repeat above precedure. (this should correct lip sag problem)

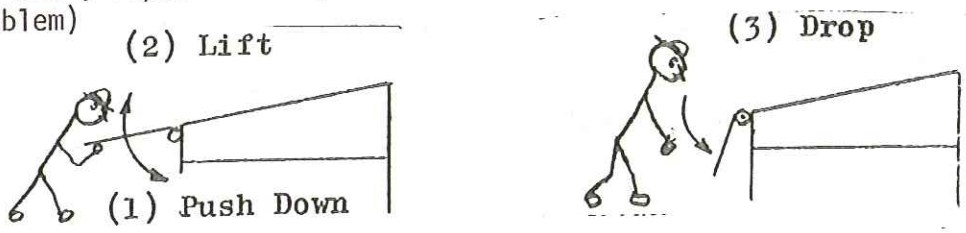

If after repeating above procedure, the lip continues to "SAG", raise the Leveler and support platform with safety leg. Jog power button to completely retract lip.

a. Locate power unit and remove indicated valve cap (from side of power unit facing front of Leveler, fig(4) to expose adjustment screw. Be careful not to lose or damage O-Ring in cap.

b. Remove adjusting screw. NOTE: Be sure to count number of turns required to remove the screw so that it can be replaced to the same position from which it was removed. If screw is not replaced to the same position from which it was removed, adjustment of the lip will be altered.

c. Remove spring and ball assembly, check valve and orifice for foreign matter and allow a small amount of fluid to run from the valve orifice. Replace the spring and ball assembly and insert flat faced rod (3/16" dia.) into spring and tap LIGHTLY several times to seat ball. Replace adjustment screw to exactly the same position as it was removed. Replace cap with O-Ring and tighten lightly so that valve does not leak.

d. Run Leveler and check for normal operation.

(4) Lip Control Valve

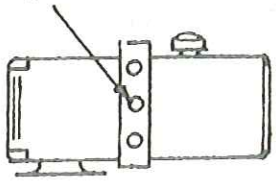

If this adjustment is not understood, or a problem is confronted during any work performed on a McGuire Leveler, please contact our factory.

5-YEAR GUARANTEE

W. B. McGUIRE COMPANY, INC. guarantees that its "TRUE RATED"—AUTODOK® DOCK LEVELER is designed to meet or exceed the maximum stress analysis requirements for models shown below:

AUTODOK LEVELER

MODEL NO.	GUARANTEED DYNAMIC LOAD CAPACITY	GUARANTEED STATIC LOAD CAPACITY
All 20,000 pound models	20,000 pounds	27,000 pounds
All 40,000 pound models	40,000 pounds	50,000 pounds

For a period of TWO (2) YEARS from date of installation, the W. B. McGUIRE COMPANY, INC. will exchange, free of charge, with new replacement parts, any structural component or assembly found to be defective, from other than overload, abuse or negligent use.

In addition, for a period of FIVE (5) YEARS from date of installation, W.B. McGUIRE COMPANY, INC. guarantees its patented Contromatic® hydraulic valve assembly and all hydraulic cylinders and pressure hoses and will exchange, free of charge any hydraulic component with a new replacement part, if found to be defective, from other than abuse, overload or negligent use.

McGUIRE

W. B. McGUIRE CO., Inc.
HUDSON, N.Y.