Installation Manual

1500mm

THRUSLIDE FACE MOUNTED BAR TRACK

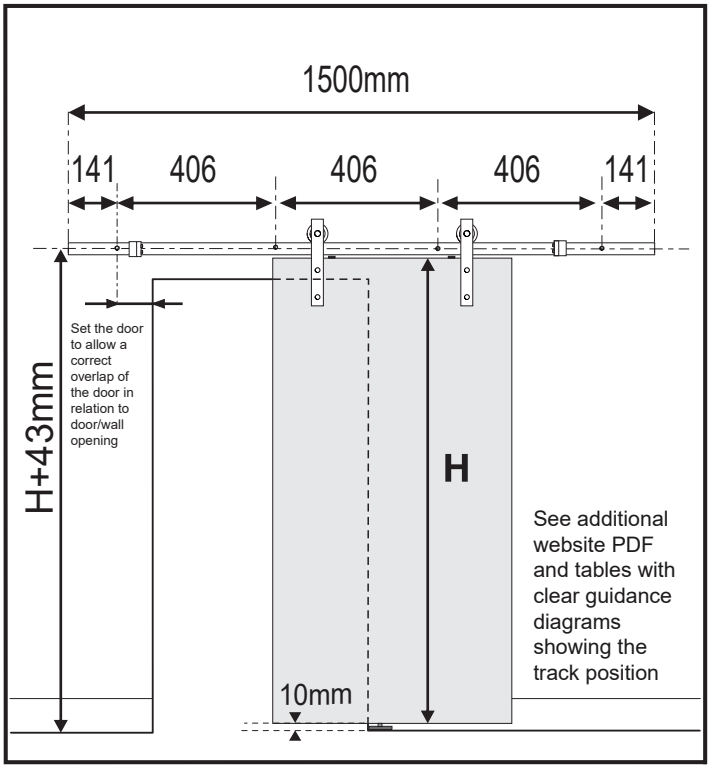

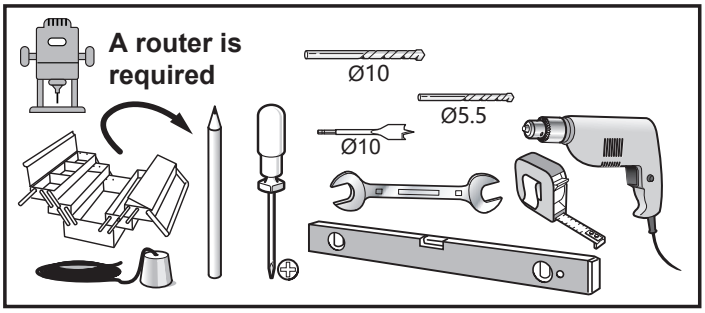

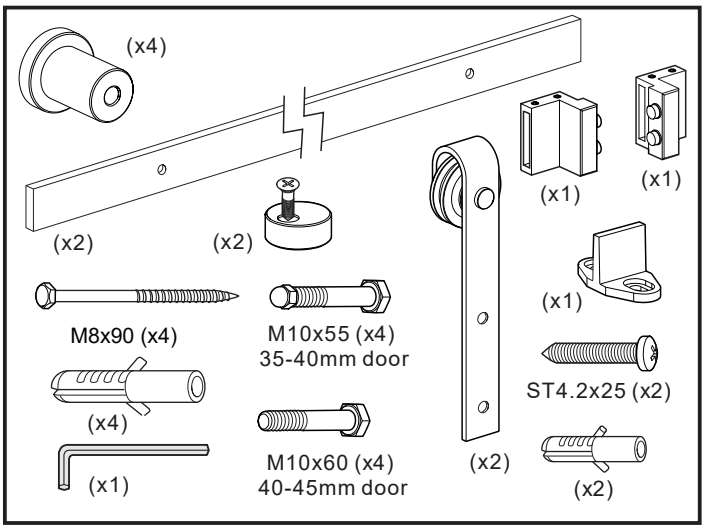

1

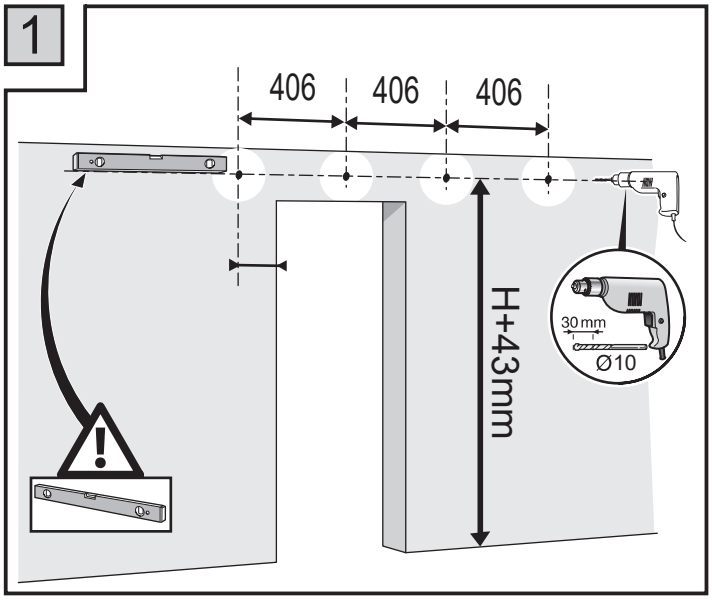

3

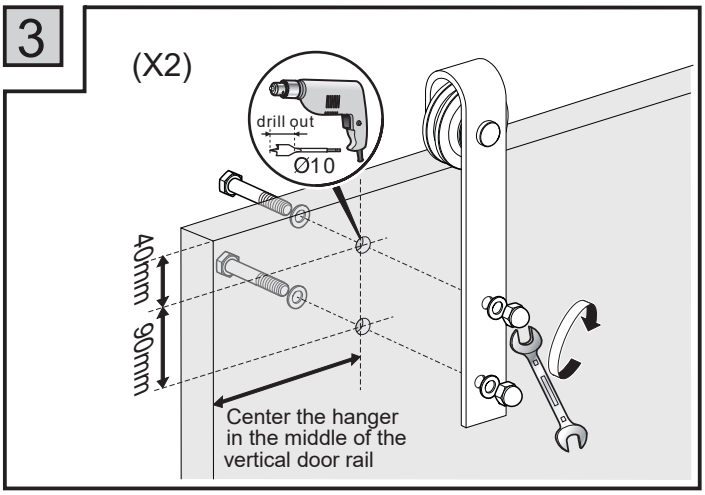

2

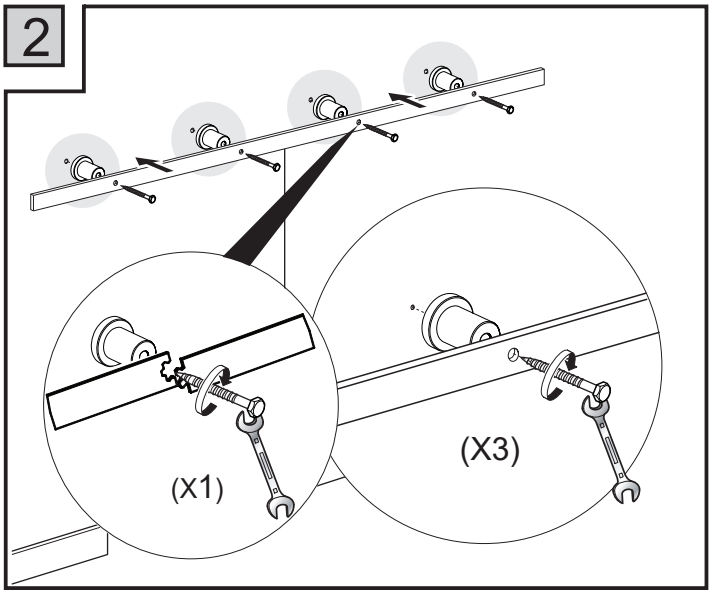

4

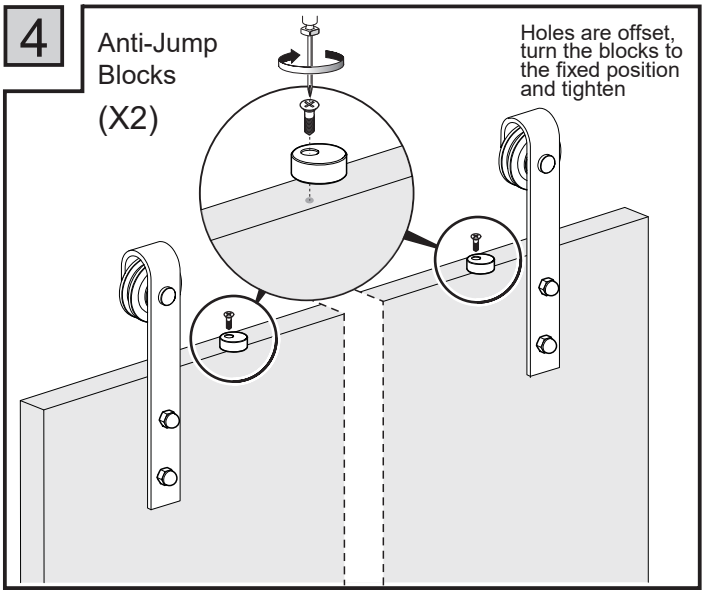

5

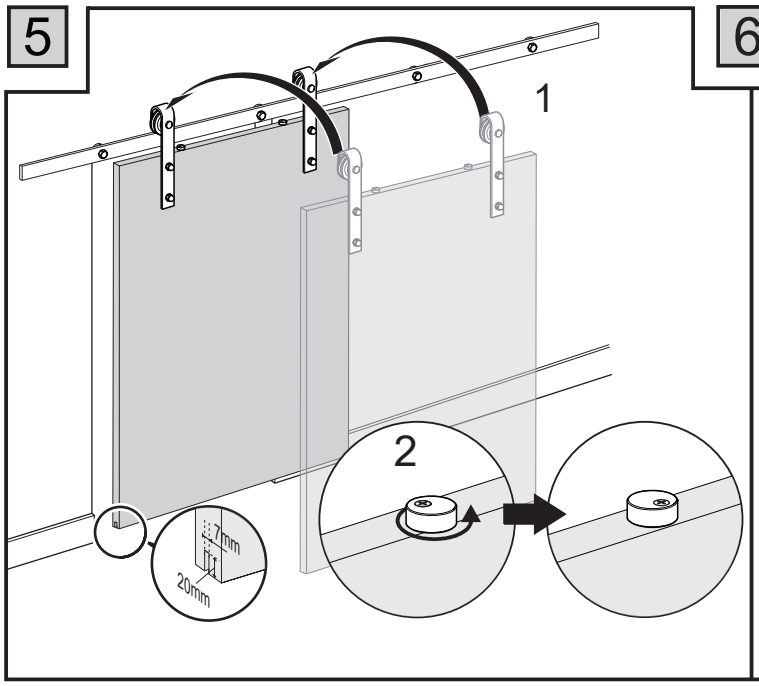

6

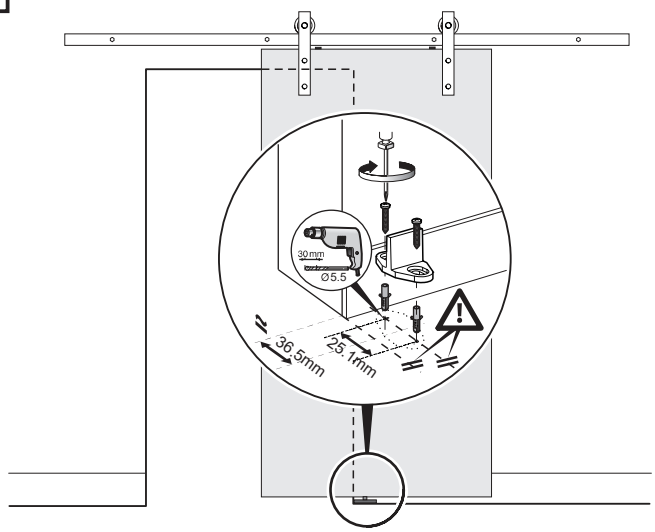

7

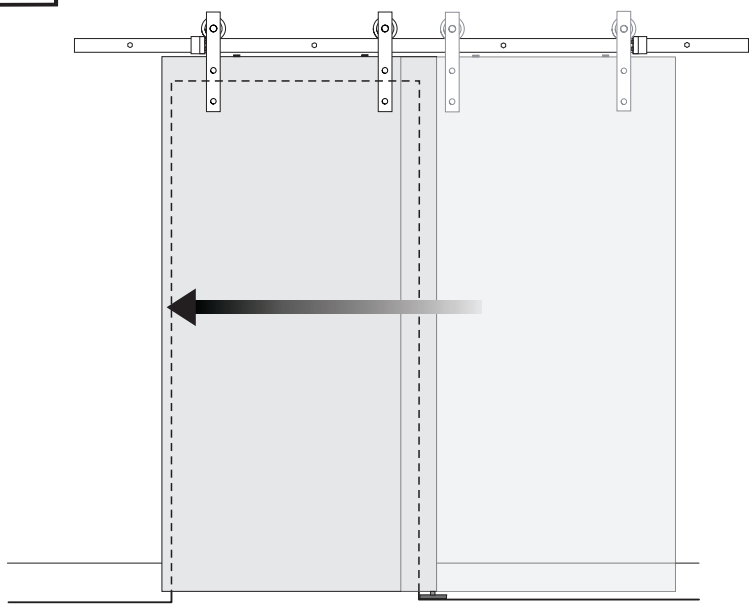

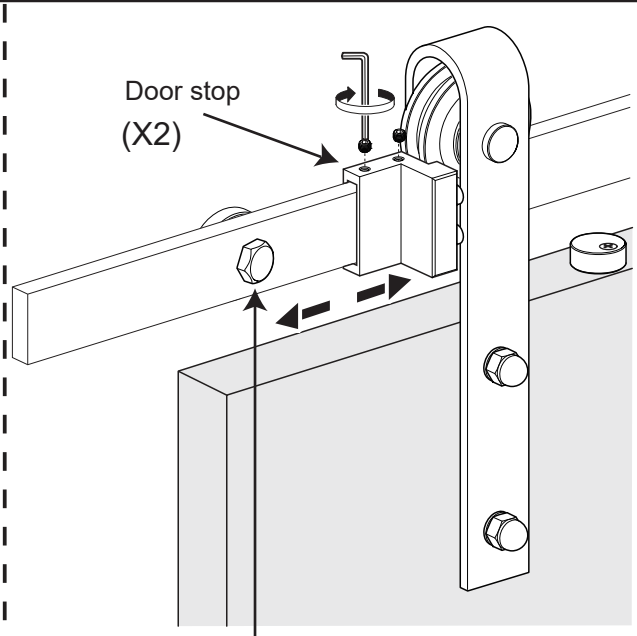

It may be necessary to remove the track end bolt (at each end) to allow the door stop to be fitted correctly, then re-fix the end bolt