Installation Manual

1830mm

THRUSLIDE FACE MOUNTED BAR TRACK

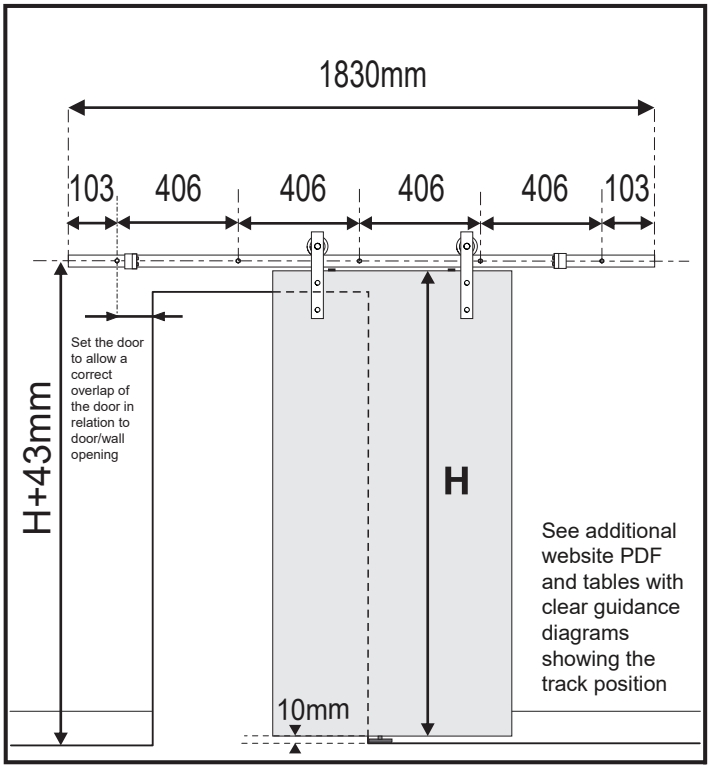

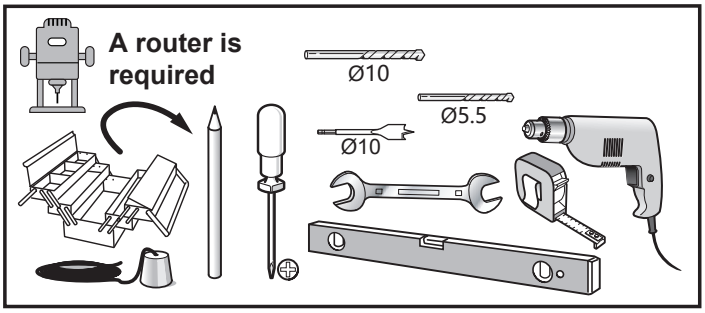

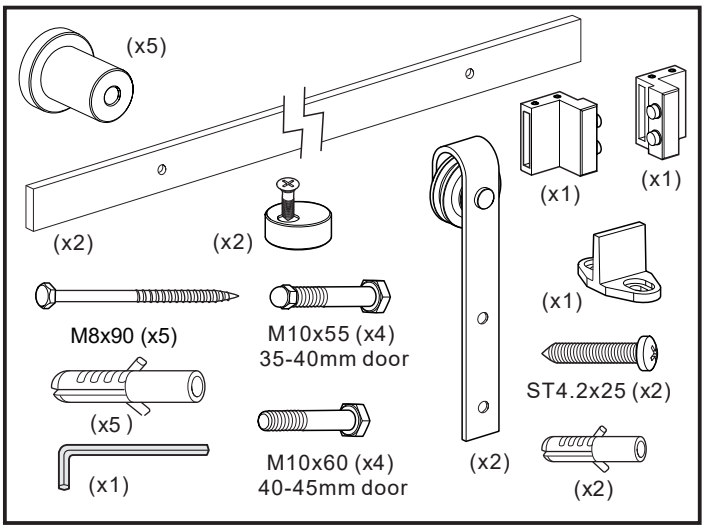

1

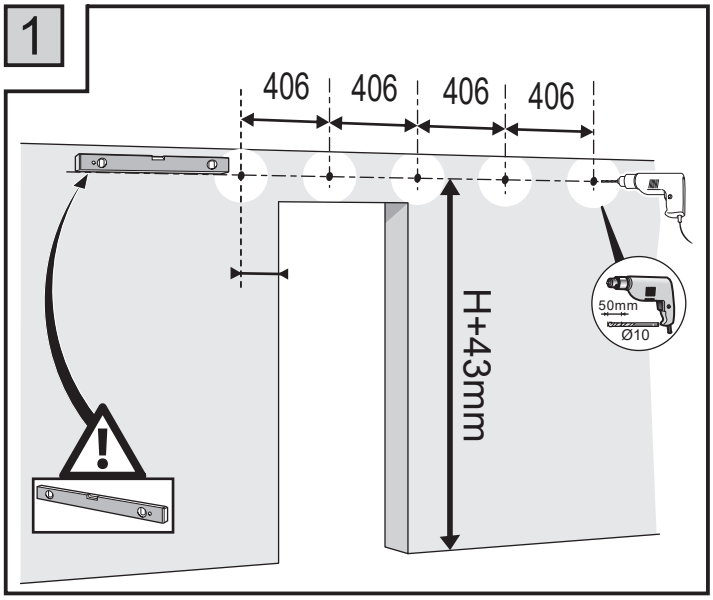

3

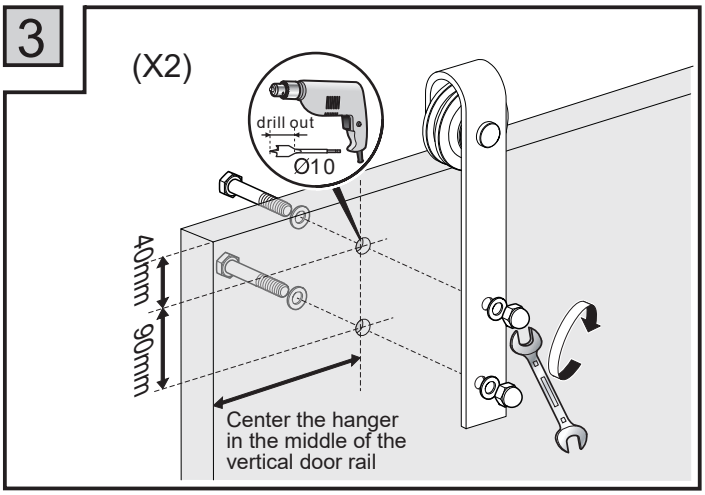

2

For the best results and minimal clearance between door and frame/architrave please investigate fitting this wall fixing spacer directly to the wall, this will require the lintol facing/architrave being removed from the doorway OR fitting timber spacers against the frame legs/lintol BUT please check what suits your situation best.

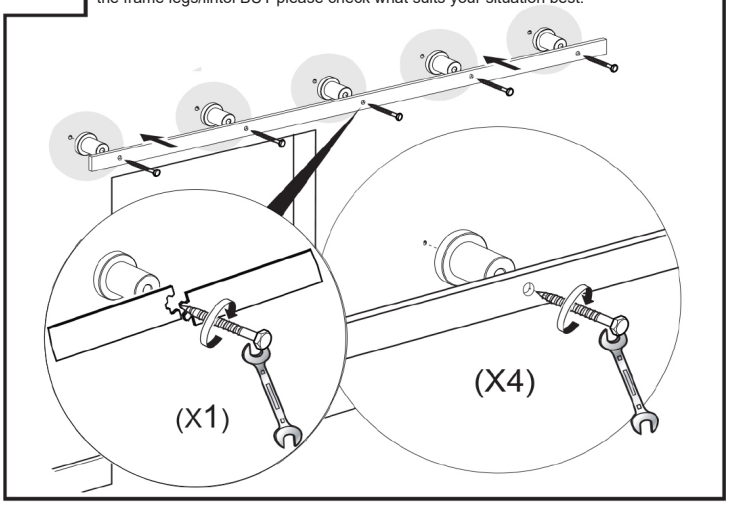

4

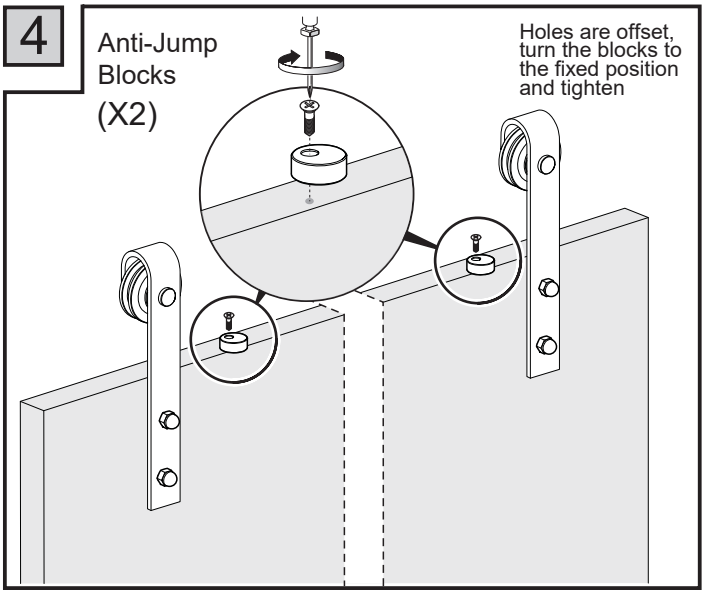

5

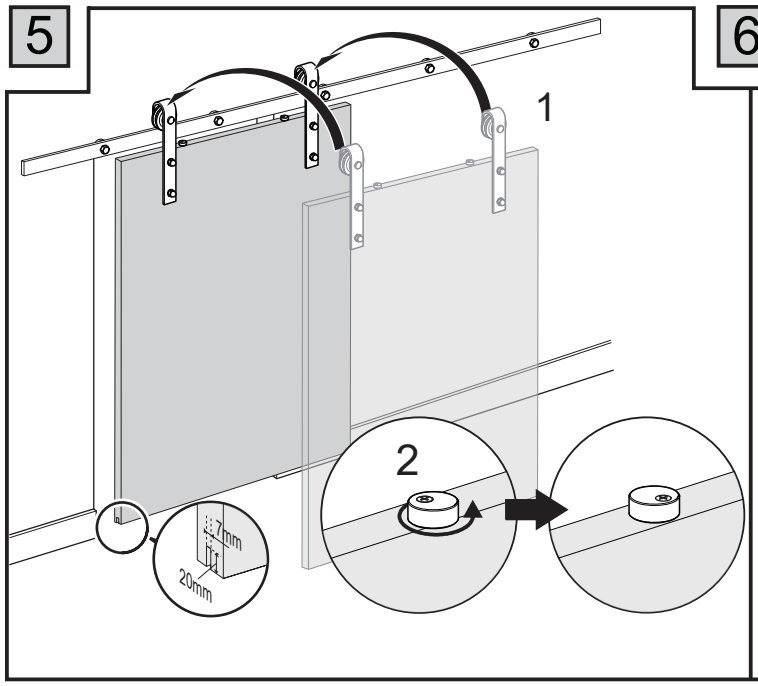

6

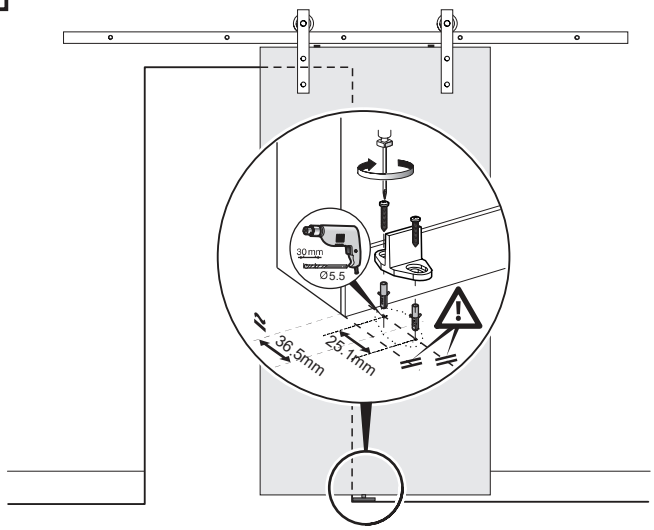

7

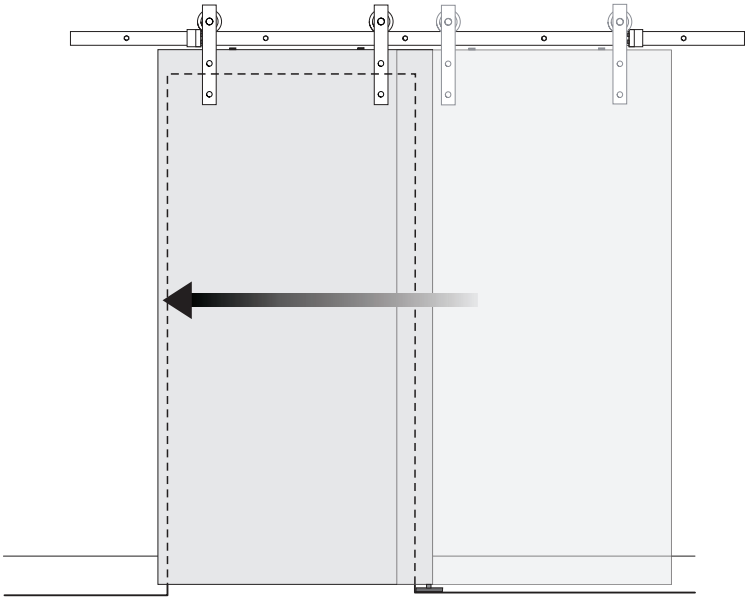

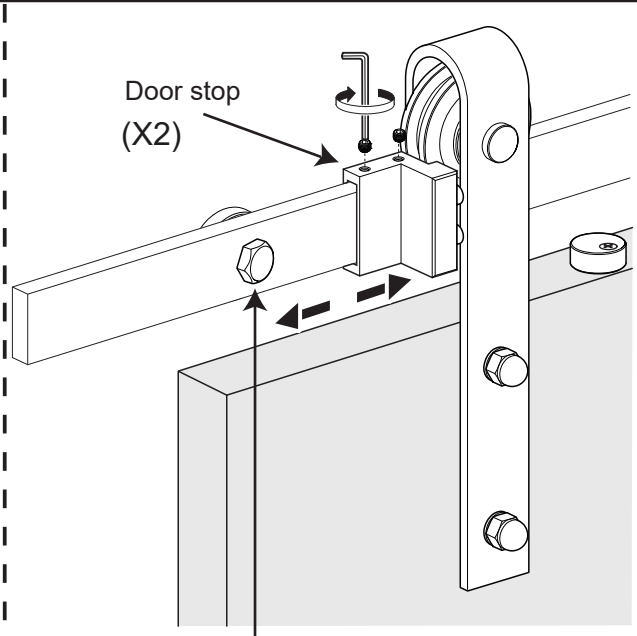

It may be necessary to remove the track end bolt (at each end) to allow the door stop to be fitted correctly, then re-fix the end bolt