Installation Manual

2100mm

THRUSLIDE TOP MOUNTED BARN TRACK

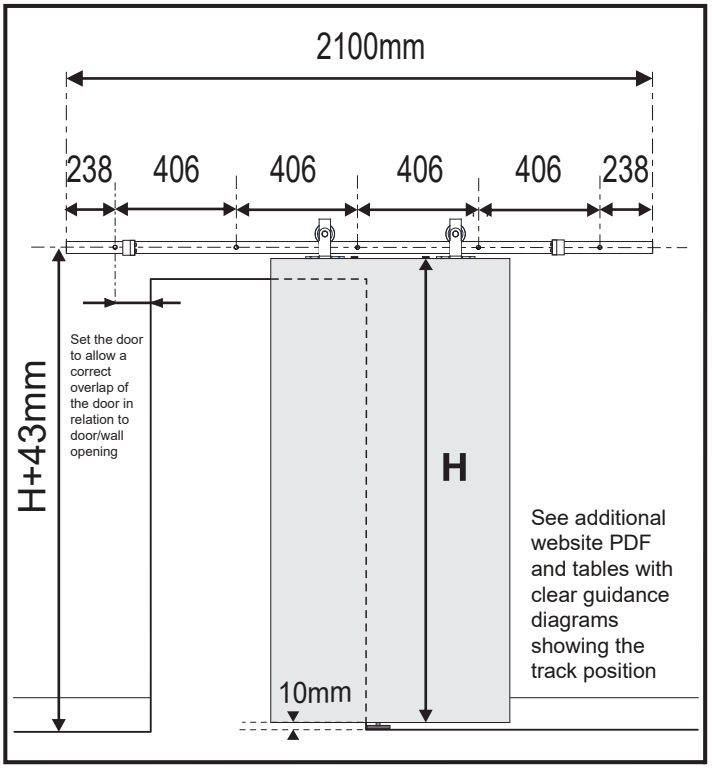

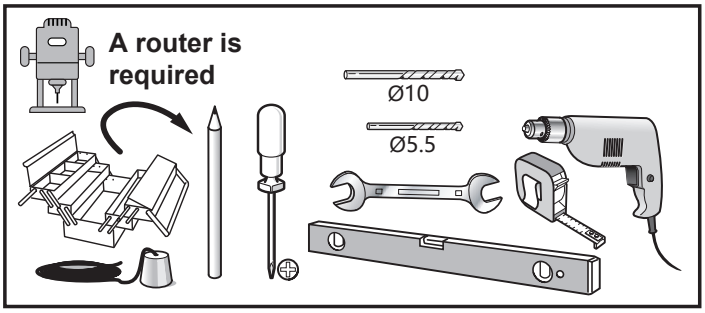

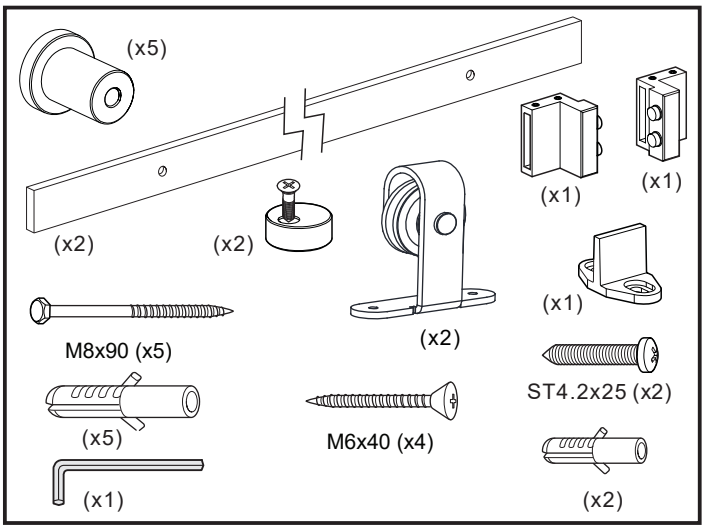

1

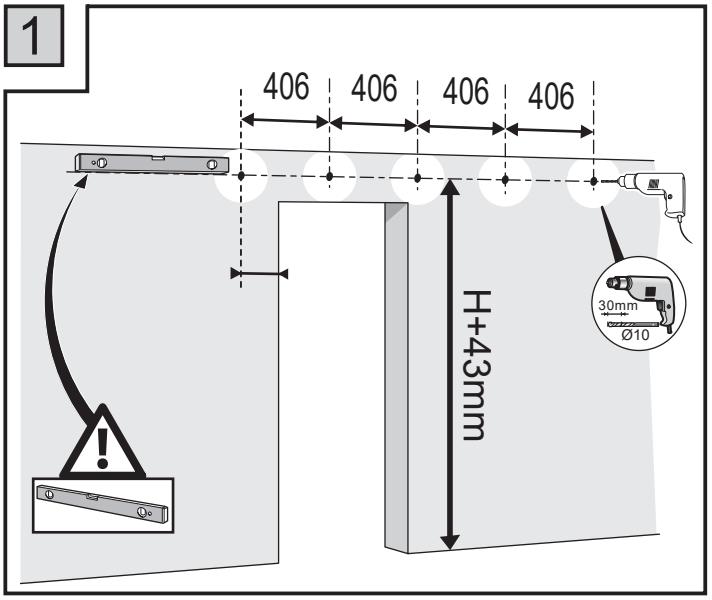

3

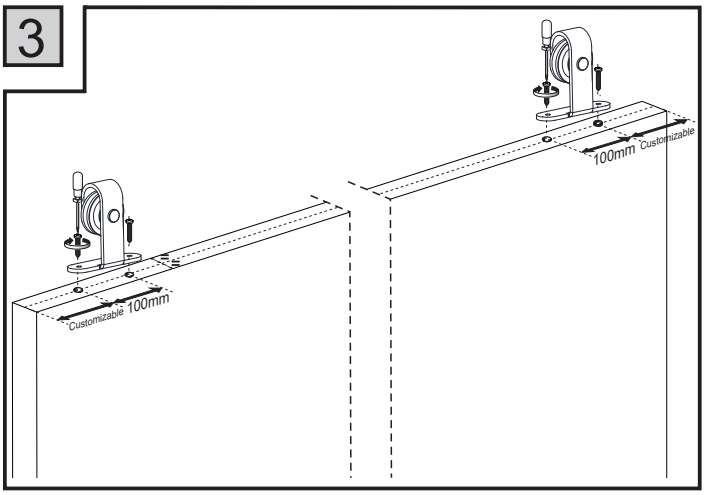

2

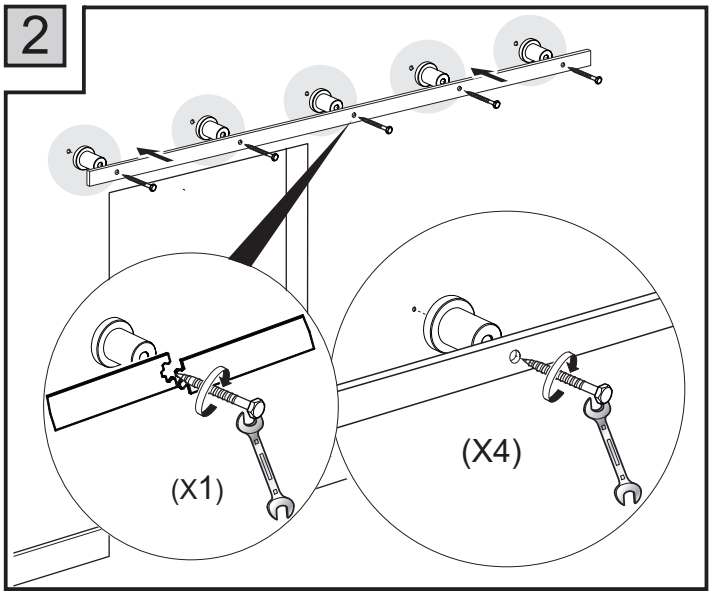

4

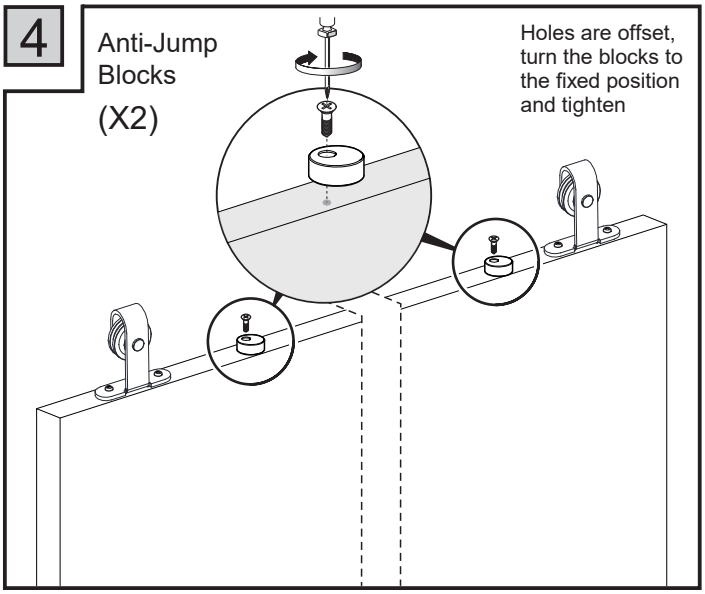

5

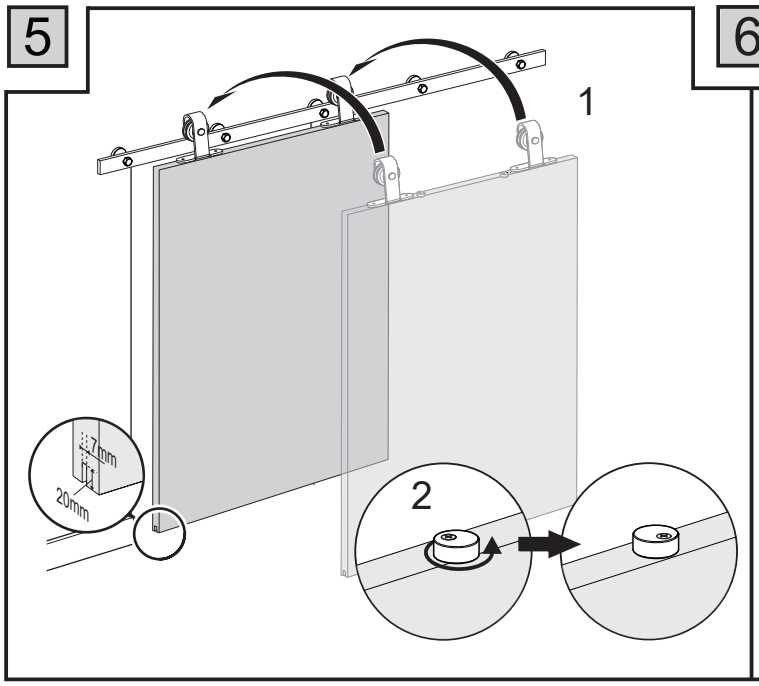

6

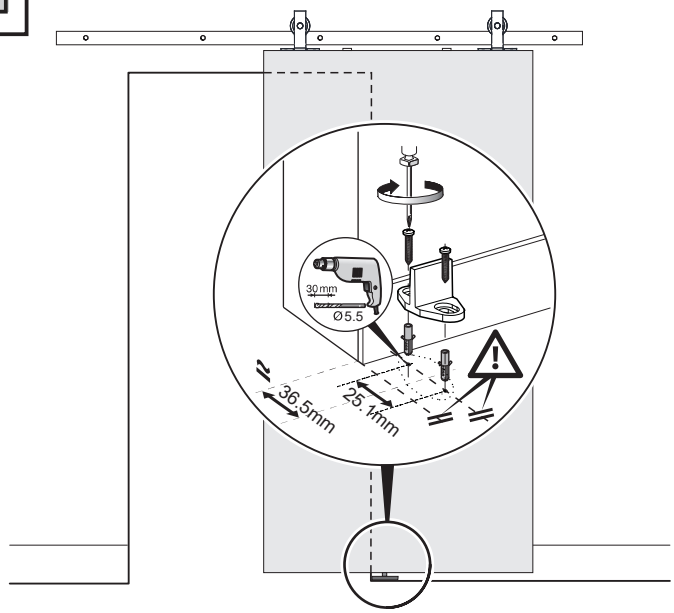

7

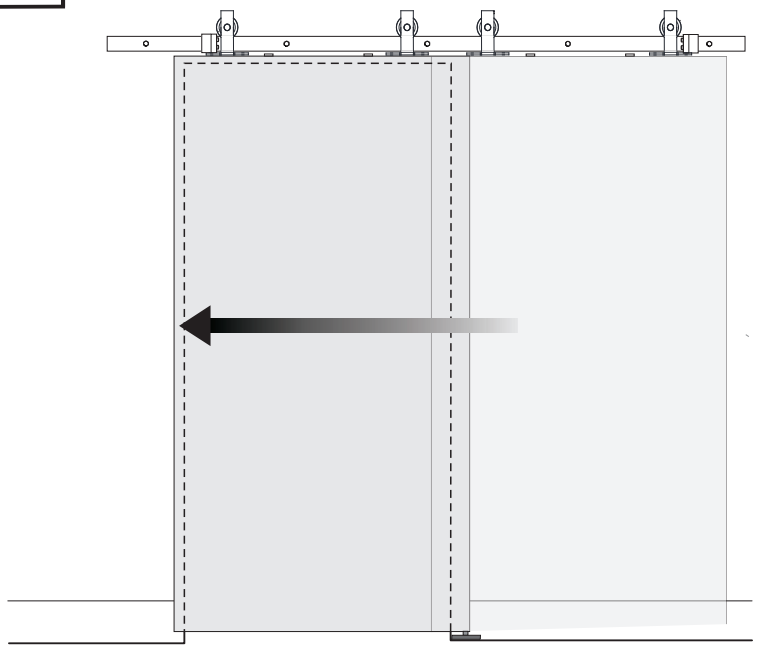

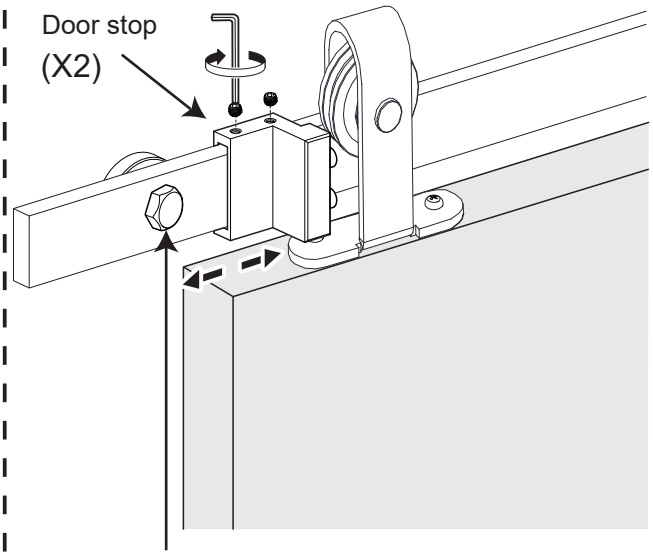

It may be necessary to remove the track end bolt (at each end) to allow the door stop to be fitted correctly, then re-fix the end bolt

Direct Doors.com®

Bay 5 Eastfield Industrial Estate,Penicuik,Edinburgh,EH26 8HA, Scotland,Telephone:01968671681,Email:info@directdoors.com