Outdoor Chaise Lounge

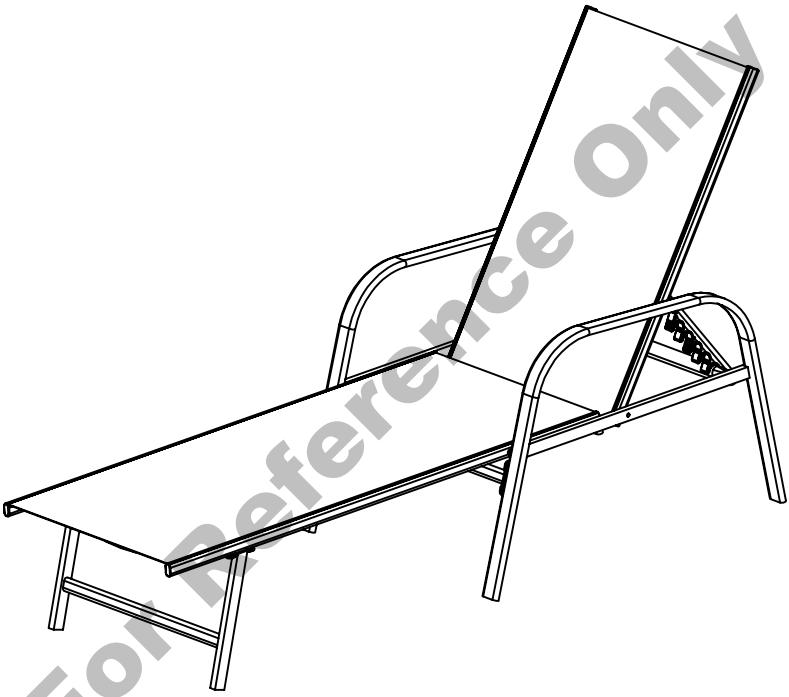

For Reference Only

Assembly Instructions

Made in China
The owner's manual contains important safety information as well as assembly, use and maintenance instructions. Keep the packaging and bags away from children and dispose of all packaging properly before use. Keep this manual for future reference.

For Reference Only

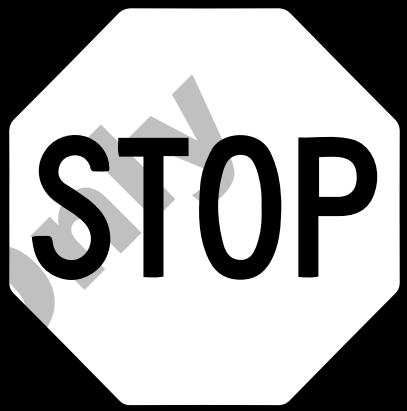

PLEASE DO NOT RETURN THIS PRODUCT TO THE STORE

We will be happy to correct any problems that you may have, or answer any of your questions regarding the purchase of this product. Please contact us at our Toll Free customer service number 1-800-599-8898 for any assistance and replacement parts. Thank You.

Dist. by TDC USA, Inc. Fairfield, NJ 07004
©2023 All Rights Reserved.
Made in China
Item 22652
www.tdcusainc.com

⚠ WARNING!

- **Keep all children and pets away from assembly area. Children and pets should be supervised when they are in the area of the product construction.**
- **Some parts may contain sharp edges. When assembling and using this product, basic safety precautions should always be.**
- **Please read all the instructions and warnings before assembling. In order to make the whole product adjust to the best, please install all the screws on the product and tighten all the screws after adjusting the product which can stand on the floor even. Not intended for commercial use.**
- **Check all bolts for tightness before use.**
- **IMPORTANT - check and tighten bolts often to keep them secure**

· **CHOKING HAZARD** - Small parts. Not suitable for children under 36 months. The product contains small parts, keep children away when assembling.

· **ADULT ASSEMBLY REQUIRED.**
Always remove protective material and poly bags and dispose before assembly.

For Reference Only

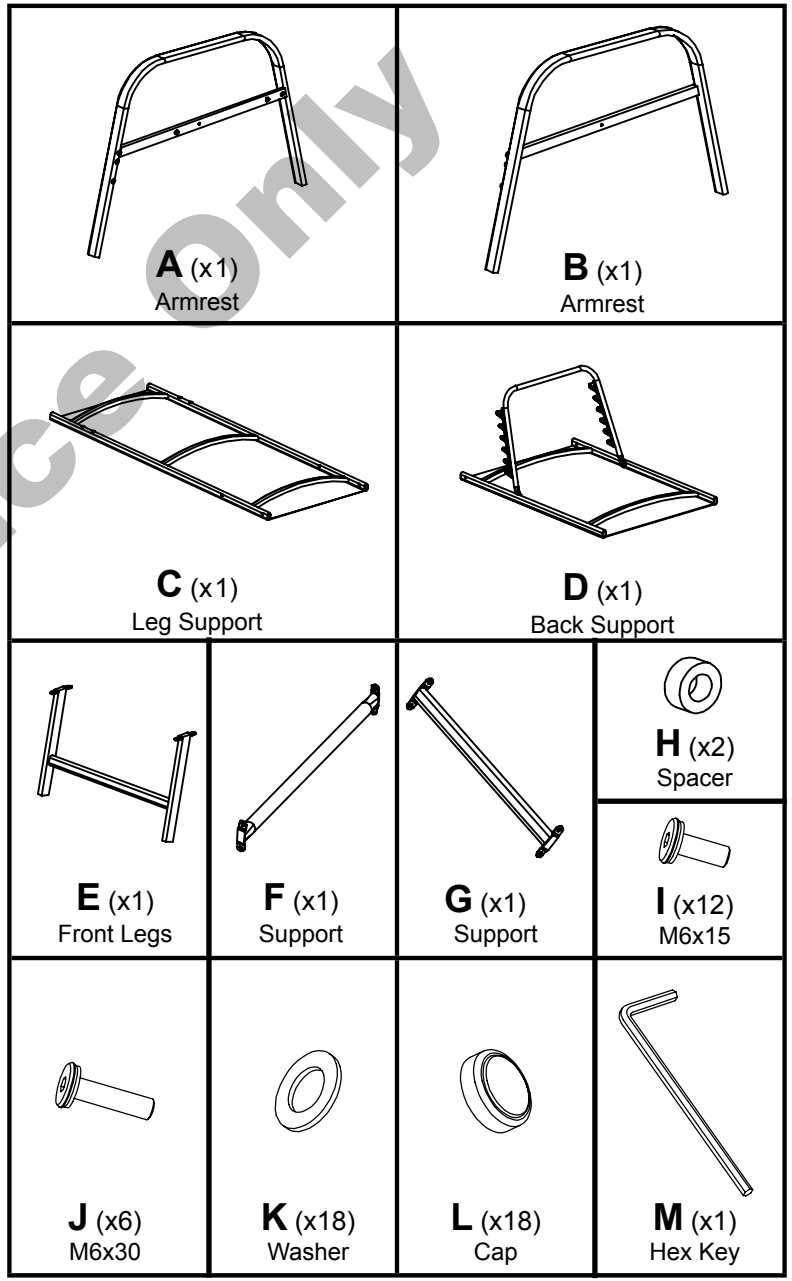

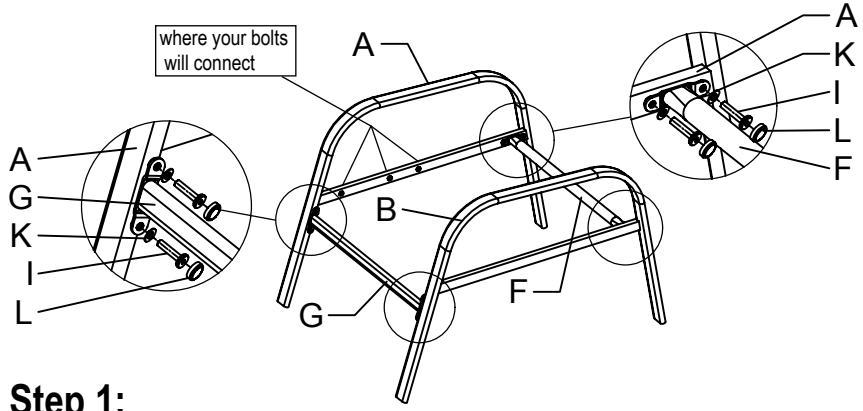

Step 1:

Before you begin, please take note of where bolts will connect on each armrest, parts A and B.

Insert two M6x15 Bolts (I) with Washers (K) through the eyelets at the end of Support (G), and into the bolt-threading found on the front leg of Armrest (A). Follow this step to connect the opposite end of Support (G) to Armrest (B).

Insert two M6x15 Bolts (I) with Washers (K) through the eyelets at the end of Support (F), and into the bolt-threading found on the horizontal bar of Armrest (A). Follow this step to connect the opposite end of Support (F) to Armrest (B). **Do not tighten bolts down until you have completed Step 4 of assembly of this lounger.**

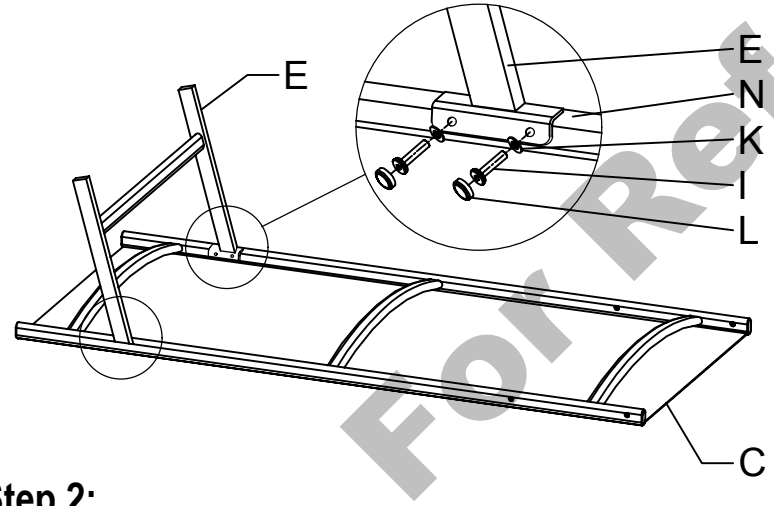

Step 2:

Set Leg Support (C) upside down on a soft, non-abrasive surface as illustrated here. Place Front Legs (E) in between the horizontal bars of Leg Support (C) as illustrated here.

Insert two M6x15 Bolts (I) with Washers (K) through the eyelets on either side of Front Legs (E), and into the bolt-threading found on the horizontal bars of Leg Support (C).

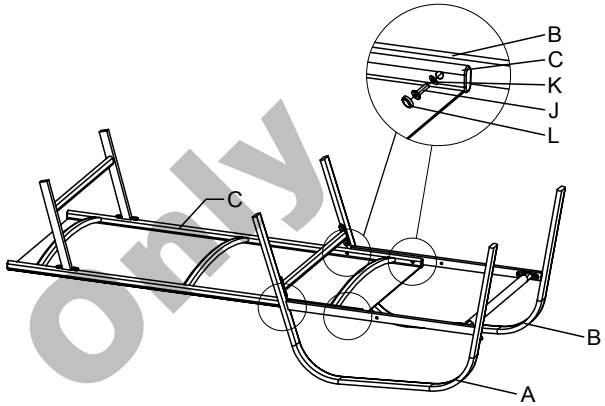

Step 3:

Place previously assembled armrests and leg support upside down, and together as illustrated here.

Insert two M6x30 Bolts (J) with Washers (K) through the eyelets found on the horizontal bar, at the opposite end of Leg Support (C), and into the second-to-last bolt-threading found on the horizontal bar of Armrest (A). Follow this step to assemble Armrest (B) to the opposite side of Leg Support (C).

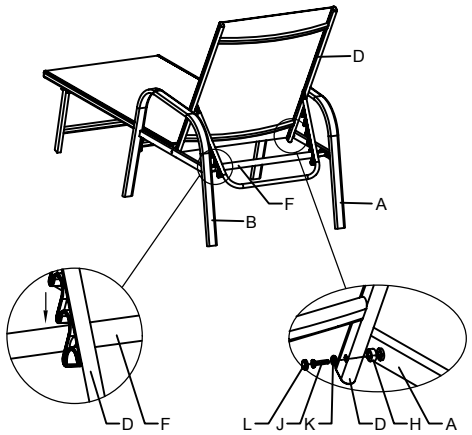

Step 4:

Place Back Support (D) in between the horizontal bars on both Armrests (A & B) as illustrated here.

Insert one M6x30 Bolt (J) with Washer (K) through the eyelet at the end of the vertical bar, found at the bottom of Back Support (D), place a Spacer (H) on bolt, and into the remaining bolt-threading found on the horizontal bar of Armrest (A). Follow this step to assemble Armrest (B) the opposite side of Back Support (D). Tighten all bolts left loose throughout assembly process. Place Caps (L) over the heads of each bolt used during assembly. Adjust the height of the Back Support (D) by placing the braces found on the U-shaped bar against Support (F). Your chaise lounger is now ready to use.

For Reference Only

LIMITED WARRANTY

Please contact our service hotline by phone, email, or fax when needing assistance with assembly or with faulty parts. This allows us to provide support in the event of possible operator errors.

All furniture manufactured and sold by TDC USA, Inc. is warranted to the original purchaser against defects in workmanship and materials. If a product manufactured by TDC fails during the first year from date of purchase under the terms of our limited warranty, TDC will replace the item at no charge. After one year, it will be the original purchases' responsibility to pay for freight and packing. TDC reserves the right, in the case of discontinued or out of production models, to replace with an item of similar quality. (Glass breakage is not warranted.)

NOTE: You must retain original receipt to obtain warranty!

FRAMES:
Frames are warranted against defects in materials and workmanship from the date of original purchase. Damage to frames or welds due to commercial use, improper assembly, exposure to water and sub-freezing temperatures, and/or abuse are not covered.

FABRIC:
Fabric on cushions, slings, and umbrellas is warranted against separation at the seams. Fading, mildew, and/or discoloration due to exposure to elements, chemicals, and spills are not covered.

POWDER COAT AND/OR PAINT:
The finish is warranted against blistering, peeling, or cracking. Fading resulting from exposure to the elements, chemicals, and spills are not covered. Scratches and chips due to normal wear and use are not covered.

FREIGHT & PACKING:
TDC will be responsible for shipping, handling, and packaging charges for all valid warranty claims.

CARE & MAINTENANCE:
Be careful to never allow water build up in fames as this will cause corrosion and freeze damage in cold climates. Wash all frames with a solution of mild soap and water. Rinse will clean water and dry with a soft absorbent cloth towel. Frames can be treated with a liquid wax for maximum protection against UV rays and/or salty damp air. If your set includes cushions, slings, and/or an umbrella, they may be cleaned be hand with a solution of soap and water with a clean water rinse.

LIMITED WARRANTY EXCLUSIONS:

- Damage caused by acts of nature
- Wind damage
- Failure caused by unreasonable, unanticipated, or abusive use
- Failure caused by a lack of reasonable and necessary care and maintenance
- Normal fade of fabrics, upholstery, or woven materials
- Glass table tops
- Bursting or cracking of tubing due to exposure to water and freezing temperatures
- Changes in wood color due to the natural aging of the wood

A sales receipt must be provided to validate the 1-Year Limited Warranty.

Customer Service:
Monday - Friday • 9:00 am - 5:00 pm
Phone: 800-599-8898
Email: support@tdcusainc.com

TDC USA, Inc.
5 Industrial Rd, STE 1
Fairfield, NJ 07004-3017

For Reference Only

Outdoor Chaise Lounge

Dist. by TDC USA, Inc. Fairfield, NJ 07004
©2023 All Rights Reserved. Made in China.
Item #22652

Questions and Comments
1-800-599-8898 (9 am - 5 pm EST)
www.tdcusainc.com

For Reference Only