E26 KUNAI

UV版

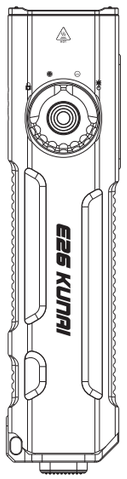

使 用 说 明 书

感谢您购买我们的产品！

www.jetbeamlight.com

产品特性

- 三种光源，随心使用
- 采用Luminus SST40 LED，最高输出达2000流明
- 使用晶透技术, 结合全新数字化光学系统设计光杯，射程可达165米
- 内置1700mAh聚合物动力电池
- 攻击头钢圈顶端配有4颗超高硬度氧化锆陶瓷珠，助于迅速破窗
- USB-C直插快充接口
- 数字恒流驱动电路, 续航最长可达65小时
- 4种常亮档+爆闪+UV+绿激光
- 新一代IC数字电路设计，LED与电池双重智能保护，最大程度延长LED和电池使用寿命，使用更安全
- 双面镀膜防刮光学镜片
- 航空级铝合金制造
- 三级硬质阳极氧化抗磨表面处理
- IPX-8级防水(水下2米)
- 1.5米抗防摔高度

产品参数

- LED: SST40 *1+365nmUV*1+520nm绿激光*1
- 最大输出: 2000流明
- 反光杯: 桔面反光杯
- 镜片: 镀膜矿物质玻璃
- 筒身材质: 航空级铝合金
- 筒身处理: 军规三级硬质氧化
- 使用电池: 内置聚合物动力电池
- 开关: 尾部开关+侧按开关+拨盘
- 长度: 131mm
- 宽度: 32mm
- 厚度: 16mm
- 重量: 115克(含电池)

亮度和时间

FL1 STANDARD	极亮	高亮	中亮	低亮	UV	绿激光	爆闪
	2000 流明	700 流明	300 流明	15 流明	1300 mw	5 mw	2000 流明
	1.6 小时	1.7 小时	3.5 小时	65 小时	3 小时	15 小时	—
	165米						
	6800坎德拉						
	1.5米						
	IPX8						

免费赠送: 战术背夹, 充电线, 手绳

注:

1、以上数据是按照国际电筒测量标准ANSI/NEMA, FL1所述之测量方法, 使用内置聚合物动力电池在实验室内测量所得, 不同电池或使用环境可能会对以上数据产生影响；

2、电筒在开启30秒高亮档后会启用自降档功能。防止过热并且有效保护LED寿命, 温度过高时手电开始缓慢降档, 直到亮度低于70%, 如果需要再用极亮档，只需关闭电筒再次打开即可。

警告

不能将光线直接照射眼睛, 以免对眼睛造成伤害.

操作手电

开关机: 单击尾按战术开关或侧按开关。

尾部战术开关: 除锁机模式下，尾部战术开关可一键极亮全功率点射，战术开关按下时侧按开关不可以正常换档和关机。

拨盘开关: 4种模式, 锁机↔白光↔UV↔绿激光为防止误触，拨盘稍紧，建议双手操作。

锁机: 关闭电筒且按键操作无效，解锁时如尾部战术开关没有处于关机状态，白光会恢复极亮档。
长时间不用手电建议关机后再锁机。

白光: 当拨盘按钮指针指向白光时，按下侧按一次，白光点亮，长按侧按开关换档，可长按侧开关进行换挡，依次是低亮档-中亮档--高亮档--极亮档（循环）,有记亿功能。

UV: 当拨盘按钮指针指向UV时，按下侧按一次，UV光点亮。UV灯光功率为1300mw。

激光: 当拨盘按钮指针指向激光时：按下侧按一次，绿激光光点亮。绿激光光功率小于等于5mw，520NM。

爆闪: 快速轻触两次尾部战术开关。

电量指示

每次开机自动执行电量显示功能, 五秒后指示灯自动关闭；
1. 绿灯常亮: 35%-100%；
2. 橙灯常亮: 15%-35%；
3. 红灯常亮: 小于15%，提示请及时充电。

充电指示灯显示

充电中：红色指示灯闪烁；
充满后：绿色指示灯常亮；

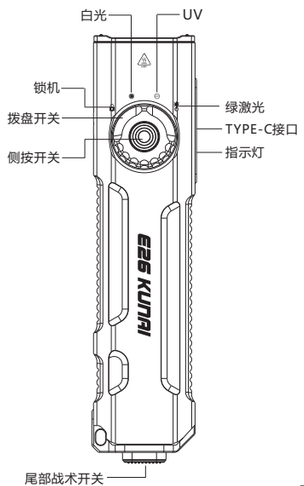

保固

JETBEAM® 产品拥有售后保固服务. 在购买本产品的15天内, 如果有任何质量问题均可向经销商要求免费更换. 在购买本产品的60个月内享受免费保固服务. 在超过60个月免费保固期后, 本产品享有终身有限度保固服务, 如需要更换重要部件则需要收取成本费用.

本保固规则不适用于以下情况:
1. 人为破坏, 拆解, 改装本产品
2. 错误操作导致产品损坏(如装反电池等).
3. 电池漏液导致产品损坏.
4. 盐水或海水腐蚀导致产品损坏

如需协助，JETBEAM®敬请消费者首先联系购买产品的经销商或零售商, 以获得最迅速的售后服务或发邮件到 info@jetbeamlight.com.

备注:
1. 产品数据如有更新, 敬请以JETBEAM官方网站为准.
2. 若充电口有水渍时，请勿进行充电，须清理干净后方可充电.
3. 保存手电时请远离有火和潮湿环境.

深圳市杰特明电子科技有限公司
咨询热线: +86-0755-28077748
销售邮箱: info@jetbeamlight.com
网　址: www.jetbeamlight.com
公司地址: 广东省深圳市龙华新区大浪南路墩背工业区二栋三楼
邮　编: 518109

RoHS FC CE

E26 KUNAI

UV Version

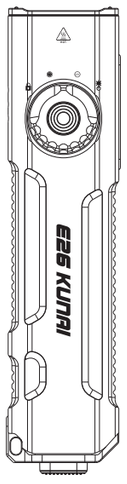

User Manual

Thanks for Your Purchase

www.jetbeamlight.com

Features

- Three light modes , free change
- Luminus SST40 LED , up to 2000lumens
- The flashlight uses Crystal Coating Technology, combined with a brand-new digital optical system designed light cup, achieving a range of up to 165 meters.
- 1700mah Li-polymer battery built-in
- 4 ultra-high hardness zirconia ceramic beads on the top of strike bezel , helps break window easily and quickly
- Type C quick charging port
- Digital constant current drive circuit, with a maximum runtime of up to 65 hours
- 4 constant brightness modes + strobe + UV+green laser
- New IC circuit design , double protection for LED and battery for a longer life and safer use .
- Double-side coated and scratch-resistant optical lens
- Product shell is made of aviation aluminum alloy
- Anti-abrasive surface finished with HA III hard anodization
- IPX-8 water proof (underwater 2 meters)
- 1.5 meters drop test

Specification

- LED : Luminus SST40*2 + 365nm UV +520nm green laser*1
- Max Lumen : 2000lumen
- Reflector Cup : orange reflector cup
- Lens : coated mineral glass
- Flashlight body material : aviation aluminum alloy
- Flashlight surface finished : military H III hard anodization
- Battery Type : li-polymer battery
- Switch : tail switch + side switch + revolving switch
- Length : 131mm
- Width : 32mm
- Thickness : 16mm
- Weight : 115g(battery included)

Output & Runtime

FL1 STANDARD	Turbo	High	Medium	Low	UV	Green laser	Strobe
	2000 LM	700 LM	300 LM	15 LM	1300 mw	5 mw	2000 LM
	1.6h	1.7h	3.5h	65h	3h	15h	—
	165m						
	6800cd						
	1.5m						
	IPX8						

Extra Accessories Included:
- USB Charging Cable
- Tactical Clip
- Lanyard

Note

1, The above data is measured according to the international flashlight measurement standard ANSI/NEMA, FL1-described measurement method, and obtained by testing with built-in li-polymer batteries in the laboratory. Different batteries or environments may affect the above data.

2, After 30 seconds of being turned on at high brightness, the flashlight will activate the automatic downshift function to prevent overheating and effectively protect the LED lifespan. When the temperature is too high, the flashlight will gradually downshift until the brightness is below 70%. If you need to use the high-brightness mode again, simply turn off the flashlight and turn it on again.

Do Not Expose Laser Light to Human Eyes.

User Operation

Power On/Off: Single-click the tail switch or side switch.

Tail Tactical Switch: except in lockout mode, the tail tactical switch can be used to instantly access the maximum brightness strobe. After turning on the flashlight with the tail tactical switch, the side switch can be used to switch modes and turn off the flashlight normally.

Revolving Switch: 4 modes, Lockout ↔ White Light ↔ White Light + Green Laser ↔ Green Laser. To prevent accidental activation, the revolving switch is slightly tight , and it is recommended to operate with both hands.

Lock : the flashlight is turn off and all function is ineffective. unlock the flashlight when the tactical tail switch does not turn off , the flashlight will restore highest brightness.

Side Switch:
1,White Light: When revolving switch pointer points to white light, press the side switch once to turn on the white light , long-press side switch to change modes : low, medium, high, and ultra high (cycling and with memory function).

2,UV: When revolving switch pointer points to UV, press the side switch once to turn on the UV light.

3, Laser: When revolving switch pointer points to laser, press the side switch once to turn on the laser(≤5mw).

Strobe: fast slightly touch the tail tactical switch twice.

Battery Indicator

Every time you turn on the power, the power indicator will automatically turn off after 5 seconds;
1. Green light: 35%-100%;
2. Orange light: 15%-35%
3. Red light: less than 15%

Charging Indicator

Charging: the red led indicator flashes .
When fully charged: the green led indicator is on.

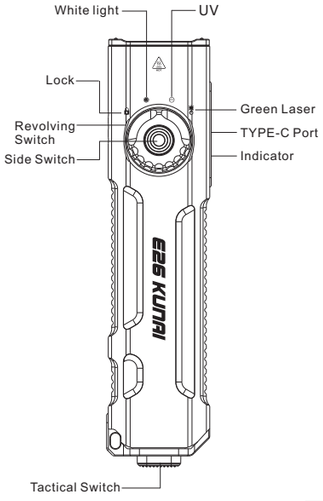

Warranty

JETBeam products come with after-sales warranty service. Within 15 days of purchasing this product, you can request free replacement from the dealer for any quality issues. Within 60 months of purchasing this product, you can enjoy free warranty service. After the free 60-month warranty period, this product is entitled to limited lifetime warranty service. If replacement of important components is required, a cost fee will be charged.

The warranty rule does not apply to the following situations

- Intentional damage, disassembly, or modification of the product.
- Product damage caused by improper operation (such as installing batteries incorrectly).
- Product damage caused by battery leakage.
- Product damage caused by corrosion from saltwater or seawater.

If help is needed, please kindly first contact the dealer or retailer for fastest after-sales service or send an email to **info@jetbeamlight.com.**

Note :

- If the product data updates, please refer to the official JETBEAM website for accuracy.
- If product gets water stains , please do not charge the product , please clean the flashlight before charging.
- When storing the flashlight, please keep it away from fire and damp environments.

JETBeam Electronic Technology Co., Ltd
E-mail: info@jetbeamlight.com
Tel: +86-0755-28077748
Fax: +86-0755-28175738
Web: www.jetbeamlight.com
Address: Dunbei Industrial Park Dalang South Road Longhua Town Shenzhen China 518109

RoHS FC CE

385x120mm 128g双铜，单黑双面印刷，风琴折