# 180° hinge

## *PROGRAM 1110*

**180° PA-hinge for single cabinets with 16 mm door return**

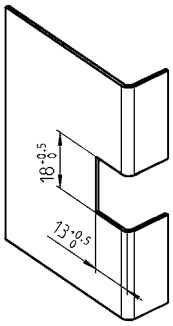


Cut out

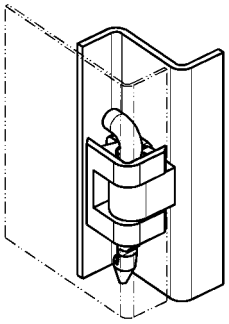

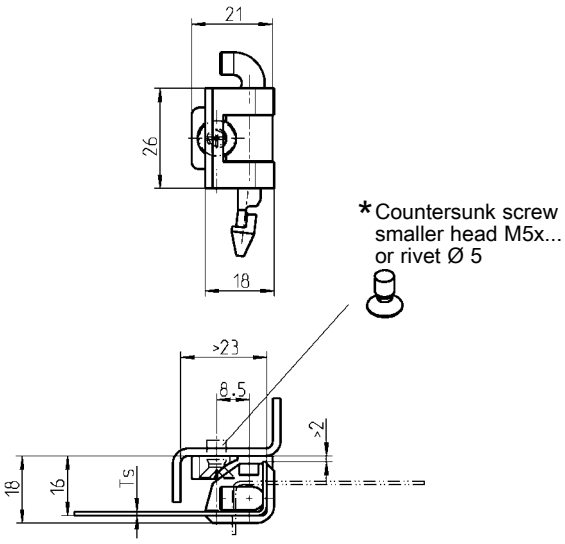

| 180° hinge polyamide GF black, pin polyamide black | |
|---|---|
| Ts 1,0 – 1,25 mm | 1110-U23 |
| Ts 1,5 – 2,0 mm | 1110-U24 |

**180° hinge for single cabinets for 25 mm door return**

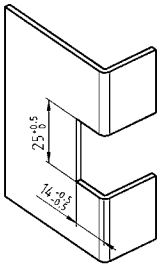


Cut out

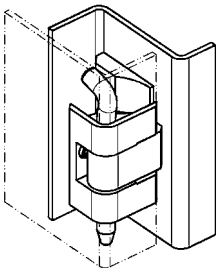

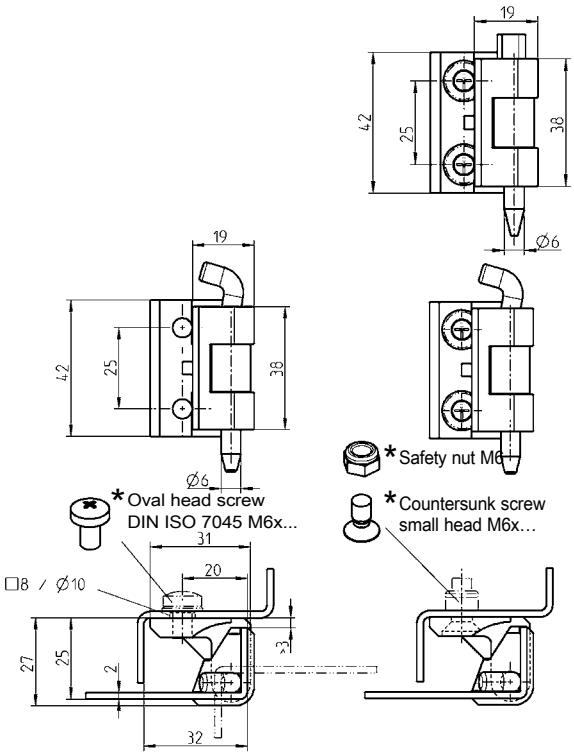


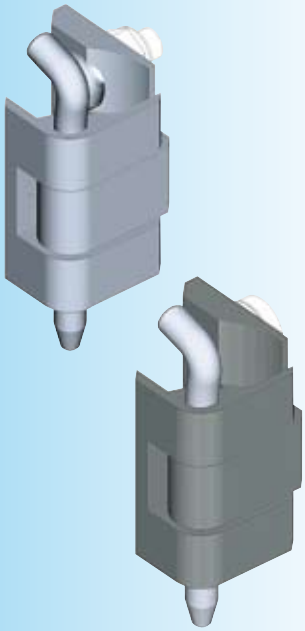

| 180° hinge zinc die, pin m.s. zinc pl. | chrome plated | black powder coated |
|---|---|---|
| Locking screw M6 | 1110-U20 | 1110-U22 |
| Countersunk screw M6 (2D-nut possible) | 1110-U19 | 1110-U21 |
| **180° hinge polyamide GF black, pin polyamide black** | | |
| Countersunk screw M6 (2D-nut possible) | | 1110-U125 |

*not included

**small head = DIN ISO 2009, 2010, 7046-1, 7046-2, 7047**

**Further parts see page**
– 2D-nut 12E-120
– Fixing material 12E-100