The Windpointe®

UNI-PACK SERIES FANS

FP7300 / FP7400 / FP7500

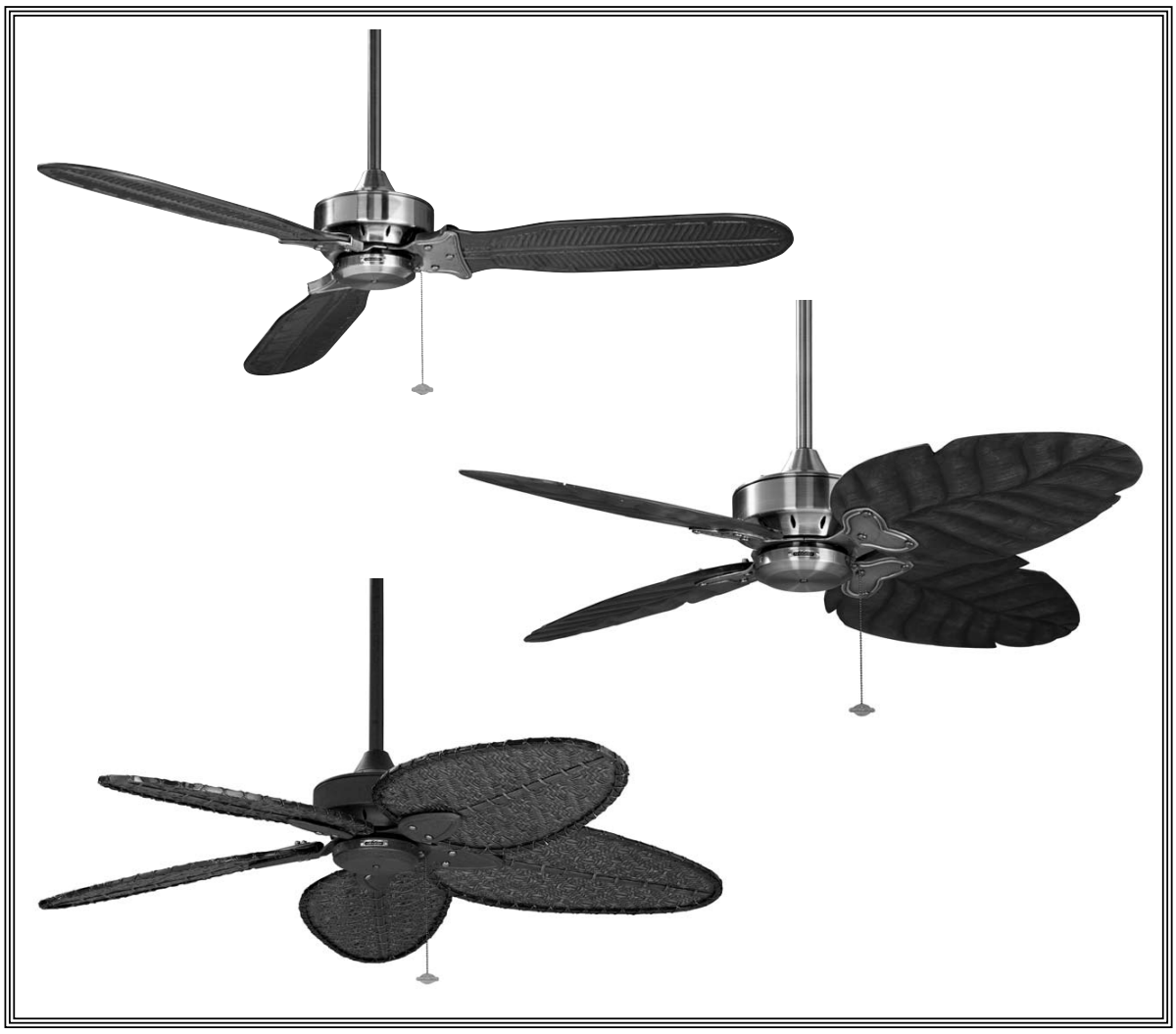

SPECIFICATION SHEET

FANIMATION®

Product Specifications subject to change

WINDPOINTE® SERIES

FP7300RS
3-Blade Style Model

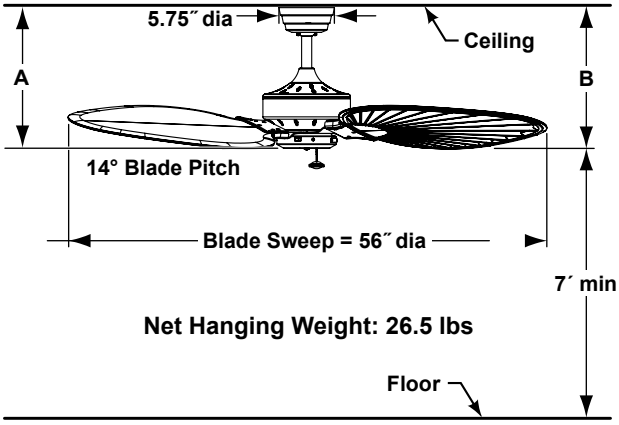

	A	B
Fan w/6˝ downrod	14.50˝	15.00˝
Fan w/12˝ downrod	20.50˝	21.00˝
Fan w/18˝ downrod	26.50˝	27.00˝
Fan w/24˝ downrod	32.50˝	33.00˝
Fan w/36˝ downrod	44.50˝	45.00˝
Fan w/48˝ downrod	56.50˝	57.00˝
Fan w/60˝ downrod	68.50˝	69.00˝
Fan w/72˝ downrod	80.50˝	81.00˝

Available Finish	
RS	Rust **(Damp)**

Energy Efficiency Info (120V)					
Fan Speed	Max RPM	CFM	CFM / Watts	Amps	Watts
High	95	4087	76	0.45	53
Med	86	3307	88	0.38	38
Low	68	1939	118	0.25	17

INSTALLATION REQUIREMENTS:
Fan must be attached to a securely anchored electrical junction box capable of withstanding a load of at least 50 lbs.

ELECTRICAL REQUIREMENTS:
Requires a grounded electrical supply line of 120 volts AC, 60 Hz, 15 amp circuit.

MOTOR SPECS:
188 x 25 motor is designed for optimal performance with this fan. 220 VAC, 50 Hz export version is available.

BLADES:
A set of three wide oval woven bamboo blades is included.

CONTROL OPTIONS:
Optional C1, C2 and C25* wall controls and C4 remote control with receiver unit are available—sold separately. Instructions are provided with each control.
*C25 wall control must be used with C4 remote control

LIGHTING OPTIONS:
Optional lighting fitters and light kits are available. See our catalog or visit www.fanimation.com for lighting options.

DOWNROD OPTIONS:
Fan comes with a 1˝ dia. x 6˝ long downrod (DR1-6). Optional downrods are available in 12˝, 18˝, 24˝, 36˝, 48˝, 60˝ and 72˝ lengths. Fan can be mounted on a sloped ceiling up to 30°. Most sloped ceiling installations require a downrod longer than the standard 6˝ downrod. Optional sloped ceiling ball kits (SCB1-52) are available for up to 52°. Call technical support for more information.

LOCATION USE:
FP7300RS is rated for dry and damp locations.

WINDPOINTE® SERIES

FP7400**
4 Wood Blade Model

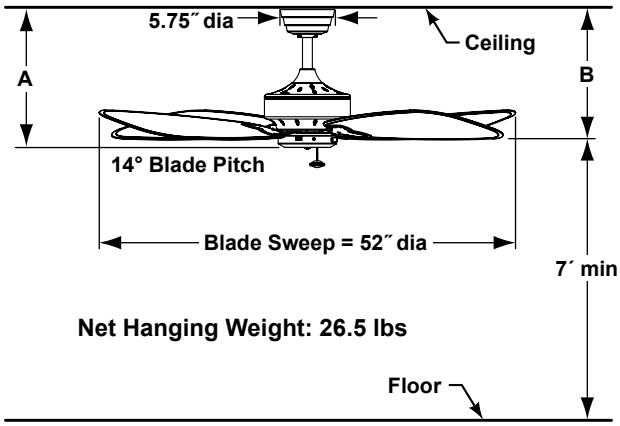

	A	B
Fan w/6″ downrod	14.50″	14.00″
Fan w/12″ downrod	20.50″	20.00″
Fan w/18″ downrod	26.50″	26.00″
Fan w/24″ downrod	32.50″	32.00″
Fan w/36″ downrod	44.50″	44.00″
Fan w/48″ downrod	56.50″	56.00″
Fan w/60″ downrod	68.50″	68.00″
Fan w/72″ downrod	80.50″	80.00″

Available Finish	
AB	Antique Brass
RS	Rust **(Damp)**

INSTALLATION REQUIREMENTS:
Fan must be attached to a securely anchored electrical junction box capable of withstanding a load of at least 50 lbs.

ELECTRICAL REQUIREMENTS:
Requires a grounded electrical supply line of 120 volts AC, 60 Hz, 15 amp circuit.

MOTOR SPECS:
188 x 25 motor is designed for optimal performance with this fan. 220 VAC, 50 Hz export version is available.

BLADES:
A set of four wood blades is included.

FP7400AB Airflow / Energy Efficiency Info (120V)					
Fan Speed	Max RPM	CFM	CFM / Watts	Amps	Watts
High	170	5129	104	0.42	49
Med	131	3867	124	0.34	31
Low	79	2257	165	0.22	14

FP7400RS Airflow / Energy Efficiency Info (120V)					
Fan Speed	Max RPM	CFM	CFM / Watts	Amps	Watts
High	145	4240	86	0.42	50
Med	110	3101	100	0.34	31
Low	67	1733	127	0.22	14

CONTROL OPTIONS:
Optional C1, C2 and C25* wall controls and C4 remote control with receiver unit are available—sold separately. Instructions are provided with each control.
*C25 wall control must be used with C4 remote control

LIGHTING OPTIONS:
Optional lighting fitters and light kits are available. See our catalog or visit www.fanimation.com for lighting options.

DOWNROD OPTIONS:
Fan comes with a 1″ dia. x 6″ long downrod (DR1-6). Optional downrods are available in 12″, 18″, 24″, 36″, 48″, 60″ and 72″ lengths. Fan can be mounted on a sloped ceiling up to 30°. Most sloped ceiling installations require a downrod longer than the standard 6″ downrod. Optional sloped ceiling ball kits (SCB1-52) are available for up to 52°. Call technical support for more information.

LOCATION USE:
Fans are rated for dry locations only.

WINDPOINTE® SERIES

FP7500**
5-Blade Traditional Model

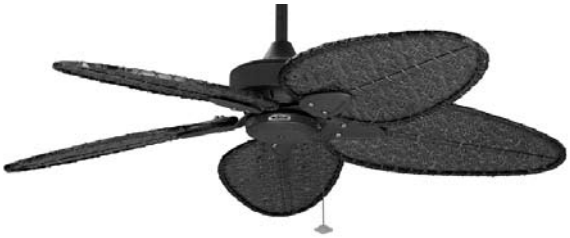

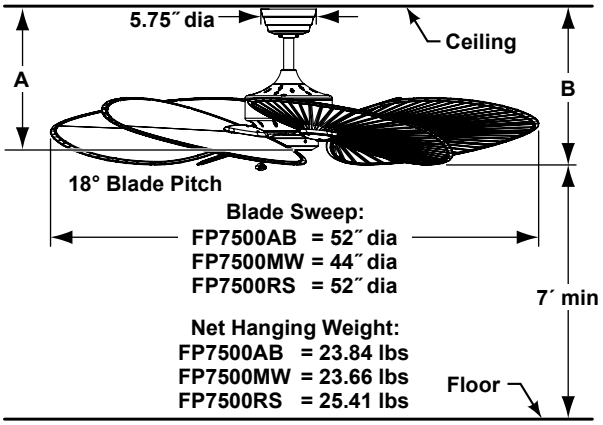

	A	B
Fan w/6˝ downrod	14.50˝	14.00˝
Fan w/12˝ downrod	20.50˝	20.00˝
Fan w/18˝ downrod	26.50˝	26.00˝
Fan w/24˝ downrod	32.50˝	32.00˝
Fan w/36˝ downrod	44.50˝	44.00˝
Fan w/48˝ downrod	56.50˝	56.00˝
Fan w/60˝ downrod	68.50˝	68.00˝
Fan w/72˝ downrod	80.50˝	80.00˝

Available Finishes	
AB	Antique Brass
MW	Matte white
RS	Rust **(Damp)**

INSTALLATION REQUIREMENTS:
Fan must be attached to a securely anchored electrical junction box capable of withstanding a load of at least 50 lbs.

ELECTRICAL REQUIREMENTS:
Requires a grounded electrical supply line of 120 volts AC, 60 Hz, 15 amp circuit.

MOTOR SPECS:
188 x 25 motor is designed for optimal performance with this fan. 220 VAC, 50 Hz export version is available.

BLADES:
A set of five blades is included.

CONTROL OPTIONS:
Optional C1, C2 and C25* wall controls and C4 remote control with receiver unit are available—sold separately. Instructions are provided with each control.
*C25 wall control must be used with C4 remote control

FP7500AB Airflow / Energy Efficiency Info (120V)					
Fan Speed	Max RPM	CFM	CFM / Watts	Amps	Watts
High	86	2633	63	0.37	42
Med	82	2337	68	0.34	34
Low	57	1420	86	0.23	17

FP7500MW Airflow / Energy Efficiency Info (120V)					
Fan Speed	Max RPM	CFM	CFM / Watts	Amps	Watts
High	122	2812	67	0.37	42
Med	109	2501	73	0.33	35
Low	75	1600	96	0.23	17

FP7500RS Airflow / Energy Efficiency Info (120V)					
Fan Speed	Max RPM	CFM	CFM / Watts	Amps	Watts
High	95	2551	60	0.37	42
Med	86	2272	65	0.34	35
Low	68	1175	71	0.23	17

LIGHTING OPTIONS:
Optional lighting fitters and light kits are available. See our catalog or visit www.fanimation.com for lighting options.

DOWNROD OPTIONS:
Fan comes with a 1˝ dia. x 6˝ long downrod (DR1-6). Optional downrods are available in 12˝, 18˝, 24˝, 36˝, 48˝, 60˝ and 72˝ lengths. Fan can be mounted on a sloped ceiling up to 30°. Most sloped ceiling installations require a downrod longer than the standard 6˝ downrod. Optional sloped ceiling ball kits (SCB1-52) are available for up to 52°. Call technical support for more information.

LOCATION USE:
FP7500AB and FP7500MW are rated for dry locations only. FP7500RS is rated for dry and damp locations.

10983 Bennett Parkway
Zionsville, IN 46077
Toll Free (888) 567-2055
FAX (866) 482-5215
Outside U.S. call (317) 733-4113
Visit Our Website @ www.fanimation.com

Copyright 2010 Fanimation, Inc.
All Rights Reserved

2010/01