Digital Boost Gauge

Specifications

- Supply voltage 10-16[v]
- -15 PSI to +45 [PSI] range
- Resolution @ 1 [PSI]
- 3 digit Blue LED display
- Red warning light will be light when Boost > 22 [PSI]

Installation

During installation do not insert the cable harness into the gauge, once your wiring is complete then insert the cable harness into the gauge. Automotive upholstery is a fantastic static electricity generator, inserting the cable harness only after wiring is complete will greatly reduce the chance of damage to the gauge by static electricity.
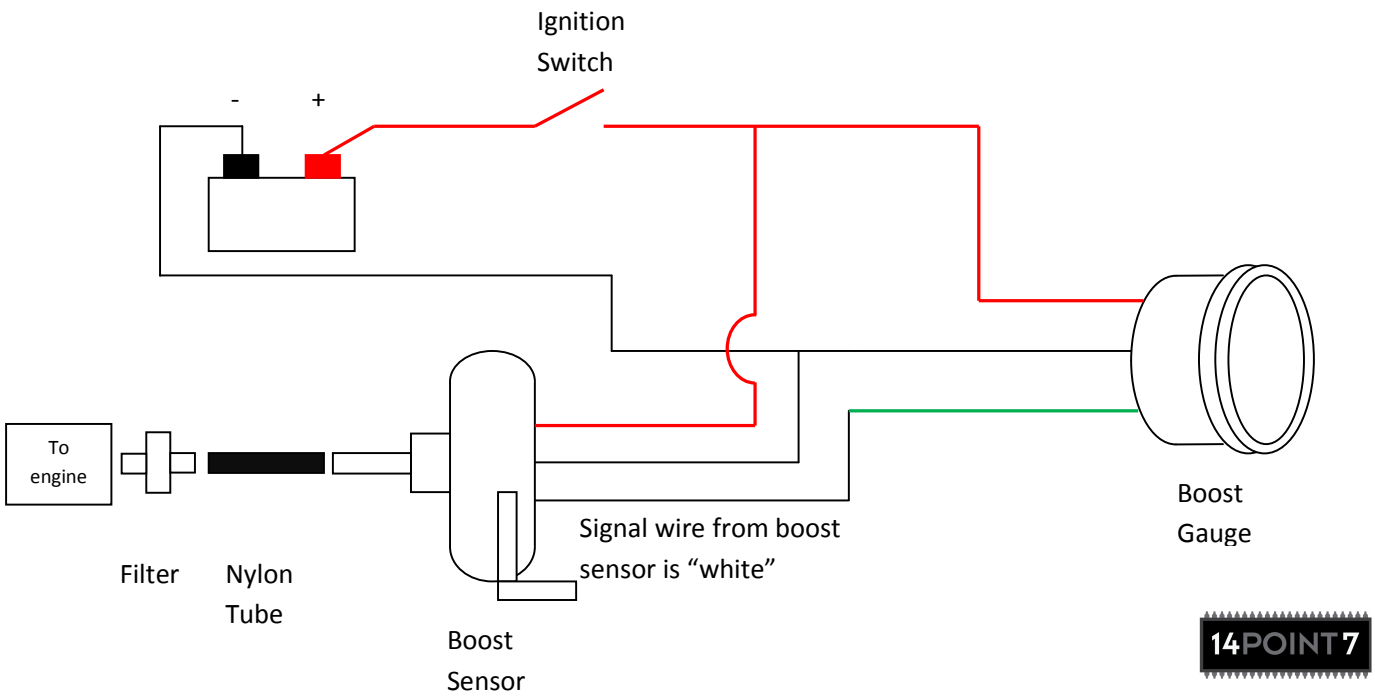
Generally you want to install the boost sensor as close to the engine as possible, there will be minimal lag in reading boost/vacuum that way. You can also install the boost sensor in the driver's compartment and use the supplied nylon tubing to connect the boost sensor to your engine.